Integrated Flight Systems Air Conditioning System

Installation Manual

For

355-00-011-HP

Sales Order Number:_____

Shipping Date:_____

Kit S/N Number:_____

Kit Model Number:_____

Customer:_____

Customer PO:_____

Kit Specifics:_____

_____

_____

STEP	PART NAME	PART #	QTY.	CHECKED BY	VERIFIED BY
	LOUVER	030011	4		
	CONDENSER FAN	IFSS 050084-7-2	1		
	LOW PRESSURE SWITCH	050107	1		
	BELT—VEE .5 X 23”	060010	1		
	SCREEN 11 X 3 RETURN AIR	080019	1		
	EXPANSION VALVE	090002-“O”	1		
	HIGH PRESSURE SWITCH	090004	1		
	RECEIVER DRIER BOTTLE (“O” RING TYPE)	090016-5	1		
	DRAIN HOSE PVC 3/8” I.D.	090018	10 FT		
	DRAIN HOSE PVC 1/2” I.D.	090018-1	5 FT		
	DRAIN NIPPLE 1/2” O.D.	100100-1	1		
	BATTERY DOOR DECAL	120087	1		
	EXPANSION VALVE COVER	250012	1		
	RETURN AIR COLLAR	250015	1		
	AFT LOUVER HOUSING TOP R/H	250018	1		
	AFT LOUVER HOUSING BOTTOM R/H	250020	1		
	AFT LOUVER HOUSING TOP L/H	250021	1		
	AFT LOUVER HOUSING BOTTOM L/H	250019	1		
	CONDENSER MOUNT ANGLE, FWD	260002	1		
	FAN CHANNEL BASE PLATE	260020	1		
	MOUNT, RECEIVER DRIER	260123-2	1		
	COND. FAN MOUNT CHANNEL	260148-3	1		
	BATTERY COMP. SHELF	260333	1		
	BATTERY COMP. ANGLE FWD. & ANGLE AFT	260335	2		
	ANGLE BATTERY COVER	260339	1		
	FILLER	260862	1		
	AFT EVAPORATOR BLOWER ASSY.	490014	1		
	FWD. LOUVER HOUSING ASSEMBLY R/H	500010-1	1		
	FWD. LOUVER HOUSING ASSEMBLY L/H	500009-1	1		
	AFT COND. CHANNEL ASSY.	510007	1		
	FWD. CONDENSER CHANNEL ASSY.	510008	1		
	BELT GUARD ASSY.	510038	1		
	EMS/LAW ENFORCEMENT L.H. AIR OUTLET (OPTIONAL)	510260	1		
	ANGLE ASSEMBLY	510265	1		

STEP	PART NAME	PART #	QTY.	CHECKED BY	VERIFIED BY
	COND. EXHAUST ELBOW ASSY.	520032-1	1		
	SCREEN ASSY, COND. EXHAUST	520052-2	1		
	CONDENSER AIR INTAKE ASSY. (W/RIGHT SIDE SLIDING DOOR)	520071-1	1		
	COMPRESSOR BRACKET ASSY.	530032	1		
	COMPRESSOR BOLT BRACKET	530034	1		
	COMPRESSOR SHOE ASSY.	530035	1		
	BELT TENSION ASSY.	530036	1		
	AFT. EVAP. SWITCH ASSY.	540026-3	1		
	ELEC. BOX ASSY.	540028-C-2-A	1		
	HARNESS ASSEMBLY	540044-4	1		
	HARNESS ASSEMBLY	540045-1	1		
	CONDENSER ASSEMBLY	550007-1	1		
	FWD. EVAPORATOR ASSY.	560023-1	1		
	AFT EVAPORATOR ASSY.	560024-O	1		

COMPRESSOR ASSEMBLY

STEP	PART NAME	PART #	QTY.	CHECKED BY	VERIFIED BY
	COMPRESSOR	010001-3 -“O”	1		

REFRIGERANT HOSE ASSEMBLIES
(R-134a compatiable.)
(Reduced Size w/Inner Barrier)

STEP	PART NAME	PART #	QTY.	CHECKED BY	VERIFIED BY
	HOSE ASSEMBLY – COND TO RECEIVER/DRIER	570020-“O”-A	1		
	COMPRESSOR TO CONDENSER	570049-“O”-A	1		
	AFT EVAP. TO FWD. EVAP TO RECEIVER/DRIER	570069-“O”-A	1		
	AFT EVAP. TO FWD. EVAP. TO COMPRESSOR	570073-“O”-A	1		

HARDWARE

STEP	PART NAME	PART #	QTY.	CHECKED BY	VERIFIED BY
	TIE WRAP (7”)	63128	100		
	TIE BLOCK	ZZCR4HM	25		
	SCREW (ALT MS24693S272)	AN507-1032R8	6		
	SCREW (ALT MS24693S27)	NAS517-3-13	26		
	SCREW	AN525-10R6	12		
	SCREW	AN525-10R7	28		
	SCREW	AN525-10R8	14		
	SCREW	AN525-10R10	13		
	SCREW (ALT MS27039-1-08)	NAS603-12P	4		
	CHROME SCREW (ALT MS24693S3D)	050020-4	1		
	CHROME WASHER	050020-5	1		
	WASHER	AN960-10	36		
	WASHER	AN960-10L	39		
	WASHER	AN960-516	6		
	WASHER	AN960-516L	8		
	WASHER	AN960-616	13		
	WASHER	AN960-616L	6		
	WASHER	AN970-3	30		
	WASHER MODIFIED	AN970-6	3		
	WASHER (Tinnerman)	A3235-020-24A	26		
	NUT	MS21083N3	26		
	NUT	MS21044N3	14		
	NUT	MS21044N5	6		
	NUT (Alt MS20364-624C)	MS21044N6	7		
	NUT	MS21044N06	1		
	BOLT	NAS1305-15	3		
	BOLT	NAS1305-16	3		
	BOLT	NAS1305-17	2		
	BOLT	AN3-3A	5		
	BOLT	AN6-10A	4		
	BOLT	AN6-12A	2		

HARDWARE

STEP	PART NAME	PART #	QTY.	CHECKED BY	VERIFIED BY
	RIVNUT	A10K80	10		
	RIVET	MS20470AD3-5	2		
	RIVET	MS20470AD4-4	16		
	RIVET	MS20470AD4-6	61		
	CHERRY MAX RIVET	CR3243-4-04	20		
	POP RIVET	AD44ABS	25		
	ADEL CLAMP	MS21919WDG10	8		
	ADEL CLAMP	MS21919WDG11	6		
	ADEL CLAMP	MS21919WDG12	8		
	INSULATION TAPE - CORK	070078-0	6 FT		
	INSULATION FOAM TAPE	070078	30 FT		
	CATERPILLAR GROMMET 1/16” I.D.	GM1	1.5 FT		
	SPIRIAL WRAP	SW12BKV	12 FT		
	AIR DUCT 3”	060024	5 FT		
	AIR DUCT 4”	060012	2 FT		
	AIR DUCT 2.5”	060025	3 FT		
	AIR DUCT 2.5”	060025	4 FT		
	BAND CLAMP (FOR EXPANSION VALVE SENSOR)	060037	1		
	BAND CLAMP	060035	5		
	BAND CLAMP	060036	4		
	BAND CLAMP	060038	1		
	#6 O-Ring	090092	5		
	#8 O-Ring	090093	3		
	#10 O-Ring	090094	3		

ELECTRICAL

STEP	PART NAME	PART #	QTY.	CHECKED BY	VERIFIED BY
	RING TERMINAL 22-18 X #6	36150	3		
	RING TERMINAL 16-14 X #6	MS25036-106	1		
	RING TERMINAL 12-10 X #6	MS25036-111	1		
	RING TERMINAL 16-14 #8	050020-7	1		
	RING TERMINAL (MS25036-108) 16-14 #10	050020-8	3		
	RING TERMINAL (MS25036-117) 8 x 5/16	050020-3	1		
	RING TERMINAL (RED) 8GA #10	050020-9	1		
	SPLICE (16-14 BUTT)	050020-1	10		
	KNIFE SPLICE 22-18	050020-6	4		
	HEAT SHRINK ¼” x 24”	070077	24”		
	FUSE 50 AMP (AEROSPATIALE) ***CUSTOMER SUPPLIED***	100FU01-050	1	**N/A**	**N/A**

DOCUMENTS

STEP	PART NAME	PART #	QTY.	CHECKED BY	VERIFIED BY
	AIR CONDITIONING OVERVIEW	1-1-AS355	1		
	ELECTRICAL ROUTING	2-1-AS355	1		
	ELECTRICAL DIAGRAM	2-11-AS355	1		
	ELECTRICAL DIAGRAM	2-21-AS355	1		
	PLUMBING ROUTING	3-2-AS355	1		
	PLUMBING ROUTING	3-12-AS355	1		
	AFT EVAPORATOR INSTALL	4-1-AS355	1		
	EVAPORATOR INSTALL	4-2-AS355	1		
	AFT EVAPORATOR INSTALL	4-3-AS355	1		
	FWD EVAPORATOR INSTALL	4-4-AS355	1		
	AIR DISTRIBUTION	5-1-AS355	1		
	AIR DISTRIBUTION	5-11-AS355	1		
	COMPRESSOR DRIVE INSTALL	6-1-AS355	1		
	CONDENSER INSTALL PAGE 1 OF 2	7-2-AS355	1		
	CONDENSER INSTALL PAGE 2 OF 2	7-2-AS355	1		
	CONDENSER INSTALL	7-11-AS355	1		
	BAGGAGE COMPARTMENT MOD PAGE 1 OF 2	8-2-AS355	1		
	BAGGAGE COMPARTMENT MOD PAGE 2 OF 2	8-2-AS355	1		
	BAGGAGE COMPARTMENT MOD	8-11-AS355	1		
	INSTALLATION INSTRUCTIONS		1		
	OPERATORS MANUAL		1		
	SUPPLEMENTAL TYPE CERTIFICATE	(SH5947SW)	1		
	FLIGHT MANUAL SUPPLEMENT		1		
	MASTER PARTS LIST		1		
	AHC SERVICE BULLETINS 63.01		1		
	AHC SERVICE BULLETINS 63.03		1		
	WARRANTY CLAIMS FORM		1		

MAJOR COMPONENT SERIAL NUMBERS:

CONDENSER BLOWER S/N: _____

COMPRESSOR S/N: _____

INTEGRATED FLIGHT SYSTEMS

4607 B Aircenter Circle
Reno, NV. 89502

INSTALLATION INSTRUCTIONS

FOR

(VAPOR CYCLE)
(R-134a)

AIR CONDITIONER

IN

EUROCOPTER CORPORATION
(formerly AEROSPATIALE HELICOPTER CORPORATION)

MODEL: AS355E, F, F1, F2, N

WITH

KIT #355-00-011HP OR –021HP

(SINGLE CONDENSER BLOWER)
BY
Enviro Systems, Inc.
Or
Air Movers, LLC.

ISSUED: MAY 14, 1993
REISSUED: JAN. 5, 1996
REVISED: JULY 6, 1999
(with EPA/R-134a data)
REVISED: March 29, 2002

NOTICE

The Data Contained In These Instructions

IS NOT FAA APPROVED

See Item 2.3 and 2.6 under, General: section

Exception: Page 26 (weight and Balance Data) of these instructions contains data for computing the new C.G. of the helicopter after the subject kit has been installed.

This data is taken directly from FAA approved Report: CAS AS355-05.

STEP	PROCEDURE	MECH.	INSP.
1.0	MODELS AFFECTED READ THE FOLLOWING AND DETERMINE THE EXACT MODEL AND SERIAL NUMBER OF THE HELICOPTER INVOLVED PRIOR TO BEGINNING INSTALLATION. SEVERAL AEROSPATIALE OPTIONS, AD NOTES OR DIFFERENT AVIONIC PACKAGES CAN AFFECT INSTALLATION. THE BASIC INSTALLATION INSTRUCTIONS SHOULD BE READ AND UNDERSTOOD. BOTH THE I.A. AND THE INSTALLING MECHANIC ARE CAUTIONED THAT THE SUPPLEMENTAL TYPE CERTIFICATE UNDER WHICH THIS SYSTEM IS APPROVED REQUIRES ITS COMPATIBILITY WITH PRE-EXISTING FACTORY OR OTHER STC'D SYSTEMS PREVIOUSLY INSTALLED. IFR AND VFR EQUIPPED AIRCRAFT ARE IN SERVICE. SINGLE PILOT IFR AIRCRAFT HAS BEEN APPROVED. THESE ARE EQUIPPED WITH ELABORATE AVIONIC PACKAGES AND COMPLETELY DIFFERENT ELECTRICAL BUS SYSTEMS THAT THOSE OF WHICH THIS KIT IS PRESENTLY DESIGNED. DO NOT MODIFY THOSE AIRCRAFT WITH THIS FAA APPROVED KIT UNLESS SUPPLEMENTAL INSTRUCTIONS AND FAA APPROVAL ARE OBTAINED AND COMPLIED WITH.		
1.1	The instruction contained herein pertain to Integrated Flight Systems, kit P/N 355-00-011HP or –021HP.		
1.2	Any items or drawings required for the installation in single pilot IFR aircraft will be made known by request.		
1.3	Drawings and basic instructions are for all aircraft from serial number 5001 through present delivered aircraft. Certain differences from later model units may be found in the forward cabin area. This can affect the trimming of ABS or fiberglass parts.		

STEP	PROCEDURE	MECH.	INSP.
2.0	General		
2.1	Read instructions thoroughly before beginning.		
2.2	The installing mechanic and the I.A. shall thoroughly examine the kit and determine its compatibility to the aircraft's electrical system and any previously installed equipment, whether factory or STC'd items. The total electrical requirement is approximately 36 amps at 28 VDC.		
2.3	These instructions are intended only to sequence and clarify the Installation Drawings. In case of a discrepancy, the drawing shall be the authority. Minor installation deviations may be necessary to accommodate placement of equipment due to previously installed items or to comply with AD notes on the aircraft.		
2.4	These installation instruction do not repeat information contained on the Installation Drawings. The drawings contain all of the necessary information for installation and should be expressly followed.		
2.5	All references are to the Installation Drawings unless otherwise specified.		
2.6	The Drawings are "FAA Approved design data." They do not allow for any deviation. Any deviations required must be cleared and approved by a local FAA official.		
2.7	Prior to beginning installation, these Installation Instructions and related Drawings should be thoroughly studied. Doing so will alleviate problems arising during installation and eliminate unnecessary hours of labor.		
2.8	Standard aircraft practices should be adhered to as outlined by FAA advisory Circular 43.13-1A and 43.13-2A.		
2.9	For removal and reinstallation of seats, inspection panels, cowling, etc., see the appropriate Eurocopter (Aerospatiale) Helicopter Service manual.		
2.10	Upon completion of installation, charge and test unit following Operators Manual included in each kit.		
2.11	The instruction contained herein pertain to kit P/N 355-00-011 or –021.		
2.12	Use only refrigerant R-134a. Do not use refrigerant canned for pressure operated accessories (such as boat air horns). This type refrigerant is not pure R-134a and will case a malfunction in the system. Do not mix any other type refrigerant with R-134a.		
2.13	Avoid R-134a contact with the skin and especially the eyes. Refrigerant R-134a is non-explosive, non-flammable, non-corrosive, has practically no odor and is heavier than air. However liquid R-134a, at normal atmospheric temperatures, evaporates so quickly that it has the tendency to freeze anything it comes in contact with. Therefore, extreme care should be taken to prevent contact with the skin and especially the eyes. Should R-134a come in contact with the skin or eyes, do not attempt first aid other than immediately washing the affected area with clean water. A doctor should be contacted for immediate treatment even though irritation may have ceased.		

STEP	PROCEDURE	MECH.	INSP.
2.14	Wear safety goggles when servicing any part of the refrigerant system.		
2.15	Never use any amount of excessive heat in the immediate vicinity of the refrigerant system or R-134a supply cylinder whether it is filled with refrigerant or not.		
2.16	Insure adequate ventilation when servicing the refrigerant system.		
2.17	Never heat an R-134a supply cylinder to produce additional pressure or to attempt to empty the container completely.		
2.18	Always keep the R-134a supply cylinder in an upright position when admitting refrigerant into the system. If a cylinder is on its side or upside down, liquid R-134a will enter the system and may damage the compressor.		

STEP	PROCEDURE	MECH.	INSP.
3.0	PREPARING AIRCRAFT:		
	NOTE: STORE ALL REMOVED ITEMS		
3.1	CABIN		
3.1.1	Remove the left and right hand forward cabin doors.		
3.1.2	Open left and right hand rear cabin doors.		
3.1.3	Remove left hand (co-pilot) seat.		
3.1.4	Remove left hand (co-pilot) rudder pedals, if installed.		
3.1.5	Remove left hand co-pilot) collective and cyclic, if installed.		
3.1.6	Remove AFT headliner.		
3.1.7	Remove glare shield from instrument panel top.		
3.1.8	Remove seat cushions.		
3.1.9	Remove rear cabin bulkhead		
3.2	RIGHT BAGGAGE COMPARTMENT		
3.2.1	Remove door.		
3.2.2	Remove battery access panel.		
3.2.3	Remove battery (right hand side).		
3.2.4	Remove cargo tie-down restraining harness (right side).		
3.3	REAR BAGGAGE COMPARTMENT		
3.3.1	Remove wiring harness cover plates, right side, in forward corner of baggage compartment.		
3.3.2	Remove main electrical panel cover.		
3.4	FUSELAGE		
3.4.1	Remove belly pan, front and rear.		
3.4.2	Remove left and right side center panels on belly.		
3.4.3	Remove access panel containing landing lights.		
	*Remove "Doghouse" on top of cabin.		

STEP	PROCEDURE	MECH.	INSP.
4.0	COMPRESSOR INSTALLATION: DRAWING 6-1-AS355		
4.1	Remove lower transmission bolts required for attachment of mounting bracket. Clean away sealant from upper and lower surfaces of main transmission flange in area where bracket will contact flange.		
4.2	Loosen stiffener between combiner gearbox and transmission (right side only).		
4.3	Install compressor bracket in position.		
4.4	Install new transmission flange bolts as called out in drawing through bracket, flange stiffener and rotor brake cable bracket. Ensure clearance to cable. Torque bolts to specification of Aerospatiale Maintenance Manual.		
4.5	Install compressor drive per Aerospatiale Helicopter AMS #355A07.7052 or AHC Service Bulleting 63.01 and 63.03, as required.		
4.6	Attach compressor to adjustment bracket and position so as to align drive pulley with compressor pulley with belt "on".		
4.7	After assuring correct alignment of the pulleys, carefully mark location of adjustment bracket slots on mounting bracket (if necessary, mark position of bracket, first, then remove compressor and reposition bracket). Drill proper size hole in mounting bracket toward centerline of aircraft.		
4.8	With compressor joined to adjustment bracket and mounting hardware loosely installed, position compressor with belt in place.		
4.9	Install belt tension Assembly P/N 530036. Tension belt to approximately 50 lbs (+- 5 lbs.) and tighten all bolts. (50 lbs. is equal to ½" belt deflection)		

STEP	PROCEDURE	MECH.	INSP.
5.0	CONDENSER AND FAN INSTALLATION: DRAWINGS 7-2-AS355, 7-11-AS355		
	Note: Kits from S/N 85-001 have condenser assembly P/N 550008 supplied and installed. This requires the installation of support assemblies, which are channels. Beginning with kit S/N 91-001 the condenser for the AS 350 ASTAR is a common part with the condenser supplied for the AS355 TwinStar. New part number is 550007-1 (1991 and on)		
5.1	Remove AHC P/N 2105000001 "battery vertical support channel" and discard.		
	WARNING: Use caution when drilling upward through the transmission deck to prevent drilling into oil lines or oil tank.		
5.2	Position aft condenser channel assembly P/N 510007. Scribe holes through nut plates. Remove channel. Open up scribed holes to .250.		
5.3	Position forward condenser channel assembly P/N 510008. Repeat steps in 5.2		
5.4	Reinstall aft and forward condenser channel assembly P/N 510007 and P/N 510008. Back drill all holes, both horizontally and vertically in both channels, to the aircraft skin. Cleco in place. Remove all chips and shavings. Rivet both components in place.		
5.5	Temporarily install condenser fan mounting channel P/N 260148-3. Slide base angle P/N 260020 into place with filler, P/N 260862, under angle. Place condenser channel against inner wall and as high as possible. Inspect for rivets above the channel that may try to hold it off the underside of the transmission deck. Notch the upper edge of the channel, as required, to clear any protruding rivets or nut plates. Mark, match drill, and cleco upper existing angle to channel. Backdrill vertical and horizontal holes in base angle and condenser channel. Install rivets in top and lower parts of channel.		
5.6	Position air conditioning Electric Control Panel Assembly, P/N 540028-"C"-2-A, as shown on drawing. Mount flush with outboard edge of shelf and center Control Panel with aircraft rib above. Secure with AN3-4A bolts provided in assembly.		
5.7	Level upper shelf. Mount IFS Angle Assembly, P/N 510265 to the TOP of the shelf with nut plates facing upward. Match drill the four (4) countersunk holes in the "NEW" IFS vertical channel to the Angle Assembly. Secure the Angle Assembly to the channel with the hardware called out. Back drill through the three (3) nutplates from the top through the shelf. Bolt shelf to the Angle Assembly.		
	Note: Angle Assembly is installed so that the shelf maybe lowered in the future, if required, to allow REMOVAL of the ELECTRICAL CONTROL PANEL.		

STEP	PROCEDURE	MECH.	INSP.
5.8	Level battery shelf and match drill channel. Reinstall, with existing hardware.		
5.9	Install new shelf above battery, P/N 260333, with lips turned down, 16.5" above floor to top of lip. Use angles P/N 260335 (aft) and P/N 260335 (fwd.) provided. Warning: Use caution when drilling in vicinity of aft wall of baggage compartment to avoid damage to hidden wire bundles on aft side. Remove battery close-out fasteners in original AHC channel assembly. Position and install new channel assembly.		
5.10	Hold condenser in place, sliding mounting angles on top of condenser (aft is bolted to the condenser and forward angle is only temporarily placed on top of condenser with the lower/short angle facing forward) into the spaces created by the shims attached to forward and aft condenser channel assemblies P/N 510007 and 510008.		
5.11	Slide condenser up, aft and inboard. The condenser should fit against the vertical support at the aft end, lightly against the inboard baggage compartment sheet metal liner and upward against the angle in the "I" shaped mounting angles P/N 260002. Ensure that the top of the condenser is parallel to the transmission deck and that the top is 4.2 inches, +.2-.0 down from the underside of the deck.		
5.12	Scribe hole location in condenser mounting angles P/N 260002. Remove condenser assembly. Drill marked holes with #40 and then with #10 drill.		
5.13	Match drill forward condenser mounting angle P/N 260002, lower leg, to existing holes in the top of condenser at forward end. Secure angle to the condenser with AN3-5A bolts and AN960-10 washer. Angles lower leg must face forward.		
5.14	Reinstall the condenser. Use at least three or more AN3-4A blots into forward and aft condenser channel assemblies. Mark a 7" hole through the vertical support, P/N 260148, on the aft side of condenser cover. Remove condenser assembly. Cut out hole with hand tools only. Take care not to hit turn bends of coil. Doubler on inside of condenser is now aligned with holes and pop riveted in place take care to match alignment of nut plates on doubler to those in vertical support. Re-install condenser.		
	Warning: Use ONLY the condenser blower MOUNTING SCREWS called out on the Drawing. Screws of excessive length can damage the copper end tubes of condenser.		
5.15	Install condenser fan P/N 050084-4. Use on mounting screw as ground for fan.		

STEP	PROCEDURE	MECH.	INSP.
5.16	Fit condenser exhaust elbow over the fan. Secure elbow with 7" band clamp after final trimming at outboard edge of mate to baggage door and air exit screen assembly.		
5.17	Install drain line to condenser and secure per Drawing. Tie wrap drain line to aft side of rear cross tube.		

STEP	PROCEDURE	MECH.	INSP.
6.0	BAGGAGE COMPARTMENT DOOR: Drawing 8-2-AS355, 8-11-AS355		
	NOTE: DRAWING CONTROLS ALL INSTALLATION PROCEDURES:		
6.1	Install door temporarily. NOTE that two different type AIR INLETS are utilized, depending on the installation of a R.H. sliding door.		
6.2	Locate center of both air inlet and outlet holes. Open holes up large enough to place a hand through the door. Pencil an outline of condenser cutout (air inlet) on to door per the supplied drawing for the type AIR INLET BEING INSTALLED. Trace outline of the fan air outlet onto the inside of the door.		
6.3	Remove door. Open up holes in the door using the data shown on the drawing 8-2-AS355 and 8-11-AS355, within the penciled area previously marked on inside of the door. Use the air inlet and air outlet provided as the final authority for sizing the hole cut outs.		
6.4	Edge fill openings in door per drawing.		
6.5	Install inserts, or utilize SCREWS & BOLTS as desired (BOTH are approved).		
6.6	Install air intake with hardware called out on the drawing. Seal edges. Cut condenser INLET fiberglass cover to mate to inlet scoop.		
6.7	Install outlet screen assembly, P/N 520052-1 in the same manner as intake scoop.		
6.8	Finish door to drawings adding any fiberglass cloth re-enforcement required.		
6.9	Modify cargo net and attaching hardware per 8-11-AS355		

STEP	PROCEDURE	MECH.	INSP.
7.0	BATTERY CLOSE-OUT PANEL: Drawing 8-2-AS355 and 8-11-AS355		
7.1	Modify panel. Install fasteners. Bend edge or add angle, per drawing.		
7.2	Install battery close-out panel. (Trial Fit)		
7.3	Replace door decal with NEW IFS P/N 120087		

STEP	PROCEDURE	MECH.	INSP.
8.0	FORWARD EVAPORATOR: Drawing 4-4-AS355 and 4-14-AS355		
8.1	Remove three (3) existing metric bolts. Reuse in 8.4.		
8.2	Remove existing rivets in floor that will be under evaporator support leg. Install new rivets per drawings.		
8.3	Attach both refrigerant lines to evaporator.		
8.4	Install forward evaporator and secure with required hardware.		
8.5	Install drain line from the evaporator to aircraft skin. Route to existing hole normally found in outer skin at right forward side. Cutting of the aircraft's skin will not usually be required. Secure drain line and cut off at negative angle.		

STEP	PROCEDURE	MECH.	INSP.
9.0	FORWARD AIR DISTRIBUTION: Drawing 5-1-AS355		
9.1	Locate the air outlets on the left and right side of glare shield. Cut templates from drawing as locators.		
	NOTE: PROPER LOCATION OF THE AIR OUTLET ASSEMBLIES WILL NOT COVER UP OR INTERFERE WITH THE LOWER GLARE SHIELD MOUNTING SCREWS. SEE DETAIL A-A.		
9.2	After final trim of the fiberglass enclosure attach flex hoses from the air outlets to the evaporator. The hose to the left hand air outlet is very straight forward. However, the installation of the right side hose can vary according to the avionics package installed. It is usually quite simple to route the hose aft of the radio stack through large existing holes in the vertical sheet metal aircraft parts. It may be necessary to cut a round hole in the vertical sheet metal components and route the flex hose through this hole after lining the edges with caterpillar for protection against changing of the hose, in some cases.		

STEP	PROCEDURE	MECH.	INSP.
10.0	AFT EVAPORATOR: Drawing 4-1-AS355		
10.1	Remove forward transmission fairing ("Doghouse") from aircraft.		
10.2	Disassemble aft evaporator as received per drawing.		
10.3	Position fan housing and evaporator shroud inside the fairing. Mark areas to be cutout. THIS IS CRITICAL, as all assembly in this area will hinge on correct placement and installation of these parts.		
10.4	Make small hole in area to be cut out for fan motor. Ensure correct location and size of cutout to be made. Remove all parts and enlarge cutout as required.		
10.5	Re-position fan housing and shroud inside fairing. Use a hole finder and backdrill holes for assembly of fan motor support plate to fan housing.		
10.6	Again remove parts inside fairing and make cutout through fairing for copper coil fittings. ENSURE THAT FAN HOUSING FITS FLAT AGAINST INSIDE OF FAIRING.		
10.7	Inspect inside, aft wall of fairing for protruding rivets. If excessive in length they will have to be removed and shorter types installed. Failure to do so will not allow the evaporator housing to lie flat against the aft wall and mate properly with the fan housing.		
10.8	Fit fan housing and evaporator shroud together and re-assemble in place as shown in drawing. Secure fan housing in place temporarily with AN970-3 washers and #10 screws.		
10.9	Assemble fan motor and fan motor shroud to fan housing, sandwiching fairing between fan motor plate and housing.		
10.10	Using outer aft evaporator support plate as a template carefully position plate and mark hole locations. Set plate aside and drill proper size holes exercising caution not to drill into nut plates in inner evaporator support plate.		
10.11	Attach outer aft evaporator support plate to inner aft evaporator support plate with appropriate hardware.		
10.12	Connect all three air ducts to evaporator assembly as shown in drawing.		
10.13	Attach drain line to evaporator.		
10.14	It is extremely important that after the evaporator assembly and all related components have been installed, that foil or duct tape be used to seal the joining surfaces and that no open rivet or screw holes are allowed to go un-sealed. The foam to be installed in the next step will enter virtually any unprotected opening. Following directions to foaming the area around the evaporator. Use care to not use too much foam. Pour in at least three steps. Excessive foam can create an undesirable buildup of pressure inside faring as foam expands.		
10.15	See "Supplemental Instructions", page 25 for foam installation.		

STEP	PROCEDURE	MECH.	INSP.
10.16	After the completion of step 11.11, route drain line down and aft of landing gear cross member. ENSURE THAT DRAIN LINE IS NOT CRIMPED WHEN BELLY PANEL IS RE-INSTALLED.		

STEP	PROCEDURE	MECH.	INSP.
11.0	AFT AIR DISTRIBUTION: Drawing 5-2-AS355 and 5-11-AS355		
11.1	Remove AFT Headliner.		
11.2	Cut one each 4" and two each 3 ¼" holes in cabin ceiling per drawing. Ensure that all holes to be cut are within the roof area covered by the "doghouse"		
11.3	Install air inlets P/N: 250018 and 250021. Seal		
11.4	Install return air collar P/N: 250015 on top cabin roof. Seal		
11.5	Attach louver P/N: 030011 into headliner per view "A-A". Seal to headliner.		
11.6	Attach return air screen P/N: 080019 to the AFT side of the Eurocopter interior panel, cutting out the area between the audio jacks at STA 105.0.		
11.7	Mark and cut out for AFT evaporator speed control switch in forward headliner.		
11.8	Install switch assembly. Route wires AFT and mate to cannon plug from main harness. Secure with tie wraps.		
11.9	Re-install headliner.		
11.10	Place transmission fairing on cabin roof. Trial fit 3" and 4" hoses to roof air inlets and return air collar. Cut off hoses, as required.		
11.11	Secure hoses and complete re-installation of faring. Seal faring to rooftop.		

STEP	PROCEDURE	MECH.	INSP.
12.0	REFRIGERATION HOSE INSTALL: Drawing 3-1-AS355 and 3-11-AS355		
	Warning: Do not move or in any way obstruct the damper weight (located under floor by pilot's door), as this is a critical component, which is tuned to the rotor frequency. Recalibration of the weight and aircraft vibration frequency require if this component is tampered with.		
12.1	Install refrigeration hose, using the plumbing diagram as a guideline. Secure all hoses per pertinent aircraft practices.		
	Note: The direction and location of the "T" fittings, which are critical to system operation.		
12.2	"O" ring type fittings have been phased in. All fittings are attached to the hoses.		
	Note: 1995 and ON: Lightweight hose of reduced barrier type with crimped "O" ring type fittings are supplied.		
12.3	The following sequence of hose connections is suggested. Remove nose access plate. Run hose assembly #6, P/N: 570049-"O"-A and #10, P/N: 520051-"O"-A, up from under aircraft past damper weight to the forward evaporator. Connect and tighten both hose fittings (after final fit of evaporator and blower, but before mounting evaporator). Mount evaporator and blower. Route hoses down and outboard at right side.		
	NOTE: ALWAYS LEAVE ENOUGH SLACK IN BOTH HOSES SO EVAPORATOR CAN BE REMOVED IN THE FUTURE WITHOUT DISCONNECTING THE HOSES.		
12.4	Preferred hose routing is outboard of damper weight. Due to the size of electrical bundles sometimes present, the alternate inboard location must be used. Run #6 hose AFT to "TEE" at drier bottle location and to the expansion valve at the aft evaporator. Do not open bottle or connect hose at this time. Extend the #6 hose up through cut out in transmission deck and connect to expansion valve at AFT evaporator.		
	Note: See plumbing drawing for the new location of the drier in the right side baggage compartment, which now protects both evaporators. Drier now contains sight glass.		
12.5	Mount drier aft of station 106.29 in right side baggage compartment (1991 and on.)		
12.6	Low side pressure switch, P/N: 050107, has been relocated to under the right side cabin floor and changed to a non-adjusting type.		
12.7	High-pressure switch, P/N: 090004, has been relocated to under the right side cabin floor. It is non-adjustable. Install both switches leaving Schrader valves in place.		
12.8	Run #10 hose from the forward evaporator aft and up through cut out in AEC Metal Cover located on top of transmission deck.		

STEP	PROCEDURE	MECH.	INSP.
12.9	Run the #10 hose from the TEE fitting above the transmission deck vertically at station 115.01 as shown on plumbing diagram, 3-11-AS355. Connect to aft evaporator and to compressor.		
12.10	Connect the #8 discharge hose from the condenser and pass the hose up through the hole cut in the AEC Metal Cover and run it parallel with the 310 hose to compressor. All holes or the cutout in the metal cover are to be lined with caterpillar, which is sealed in place.		
12.11	After all other connections have been made and tightened, make final connection at the receiver/drier. Seal #6, #8 and #10 hoses where they pass through the transmission deck.		
	Note: All refrigerant lines are to be securely fastened with Adel clamps and/or tie wraps as per guides found in AC 43.13-1A and –2A for hydraulic or similar hoses. Caterpillar should be used around all holes in metal where hoses and/or wiring pass them.		

STEP	PROCEDURE	MECH.	INSP.
13.0	WIRING: Drawing 2-1-AS355, 2-11-AS355, 2-21-AS355		
	Read completely prior to beginning.		
	Note: 1991 & on: The Master Electrical Panel, Master Air Conditioning Control Switch, mounted in the right side louver assembly of the instrument console and the 5 amp circuit breaker and thermostat located in the left side louver assembly, are now equipped with canon plugs for ease of installation and maintenance.		
13.1	All wiring is routed per 2-1-AS355. All wiring is marked for easy identification. After all wiring has been installed, it should be tie wrapped or otherwise secured to the aircraft structure in such a manner as to preclude chaffing on any component.		
13.2	The Master Air Condition Electrical Panel, P/N: 540028-"C"-2 has been changed to P/N: 540028-"C"-2-A. It is located above the aircraft battery in the right side baggage area. The new panel features a one (1) amp RESET circuit breaker and Fault detection system that will REMOVE the condenser blower and compressor from the system if EITHER a high or low pressure switch exceeds it's limits a single time.		
13.3	Install the #10 white wire (harness assembly P/N: 540045) or #8 white wire (harness assembly, P/N: 540045-1) to the Air Conditioning Circuit Breaker or fuse located under the floor of the aft baggage compartment in the helicopters Master Electrical Panel. This wire is connected at the opposite end to the "Master Air conditioning Electrical Panel".		
	Note: Required wire terminal for connection to the fuse or circuit breaker is taped to the end of the #8 wire during shipping.		
13.4	It is extremely important that the routing of all the wires first be investigated prior to their being installed. The right side wire bundle is primarily and avionics bundle. Determine the use of each wire bundle prior to running the #14 and #20 wires (harness assemblies, 1991 and on). Route the air conditioning wires, as required, so as not to attach to the avionics bundle. If wiring is run next to the avionics bundle and equipment, such as an R.M.I, is installed, a considerable deviation in the instrument may occur.		
13.5	The Master Air Conditioning control Switch is installed on the right side of the instrument console as part of "Louver Assemble", P/N: 500008-1 beginning with kit S/N: 91-001. The switch panel consists of the Master Air Conditioning Control Switch and the three (3) speed Selector Switch. One (1) each 5 amp circuit breaker is mounted in the L.H. Louver assembly and supplies protection for the systems relays (500009-1 beginning with kit S/N: 91-001)		
13.6	A second evaporator blower speed selection switch assembly, P/N: 540026-3, is provided for the aft cabin fan in the aft cabin ceiling.		

STEP	PROCEDURE	MECH.	INSP.
13.8	The electrical wire bundle is run from the Master air Conditioning Control Panel aft of the bulkhead immediately behind the A/C control panel, through and existing cutout, down to and existing cutout above the baggage floor, forward and then down below the baggage floor. It is then routed to the forward evaporator motor location, to the right side louver assembly (Master Air Conditioning Control Switch location) cannon plug location and to the left side louver assembly cannon plug location.		
13.9	After installing the "Master Control Switch" assembly, it is important that a preliminary investigation be made of the operation of the switch and that the circuit breakers marked for the evaporator fans and the condenser blower do in fact operate the correct components. This is proven after all wire harnesses have been run by running the aircraft electrical "Master-On", and placing the air conditioning switch in the "FAN" position. Only the evaporator fans should be operational. By placing the control switch in the "A/C" position, both evaporator fans should be operational, as well as the condenser blower, and a snapping action at the clutch of the compressor should be heard, after a delay of approximately four (4) seconds.		
	NOTE: The compressor clutch will not engage unless R-134a pressure has been added to the system in an amount sufficient to close the low-pressure safety switch. If the pressure switch is in an open position, this will cause the 1 amp circuit breaker to trip and not be reusable until enough R-134a has been added to close the low-pressure safety switch.		
13.10	It is important to pull the individual circuit breakers to determine that both the feeds to the switch and the individual wires are correctly located. It may be necessary to rotate the Master air Conditioning Control Switch and the blower speed control switch 180°, which can be easily accomplished. The plastic switch cap is then removed and reinstalled. It should be noted that all wiring is numbered. Refer to electrical diagram for correct wiring of the system.		
	NOTE: IT IS ESSENTIAL THAT ALL THE MOTOR AND SYSTEM GROUND WIRES BE PROPERLY CONNECTED. BURNISH PAINT FROM AREAS OF CONNECTION. FAILURE OF ANY ONE COMPONENT GROUND WILL AFFECT THAT COMPONENT—ONLY. FAILURE OF THE GROUND FROM THE "SYSTEM SELECTOR CONTROL SWITCH" WILL CAUSE "TOTAL SYSTEM FAILURE".		

STEP	PROCEDURE	MECH.	INSP.

14.0	PLACARD INSTALLATION: Drawing 5-1-AS355, 5-2-AS355, 5-11-AS355		
14.1	The placards furnished in the kit must be installed. The placard at louver assembly P/N: 50008-1 contains the word "INTEGRATED FLIGHT" in white letter on a black background,		

STEP	PROCEDURE	MECH.	INSP.
15.0	PREPARING AIRCRAFT FOR CLOSURE:		
15.1	Torque all factory installed bolts to Aerospatial factory specifications.		
15.2	Torque mark all bolts on rotating components, drive shafts, housing or other critical area.		
15.3	After refrigerant leak tests and charging of the system is completed. The aircraft should be reassembled to the same configuration as before the installation began. It is imperative that all loose nuts, bolts, chips, and etc., be cleaned from the aircraft by vacuum cleaning. Immediately prior to final closure, inspection should be made by an I.A inspector or other approved Inspection Authority.		
15.4	Close up aircraft. Reinstall all seats or other components and panels removed.		

STEP	PROCEDURE	MECH.	INSP.
16.0	AIRCRAFT PAPERWORK:		
16.1	Upon completion of the system, FAA Form 337 must be completed. A new Weight and Balance is computed, using the guidelines furnished in these instructions, superseding the previous Weight and Balance. A copy of the STC, and Flight Manual Supplement shall be delivered to the aircraft owner along with a copy of the "Operators Manual" and the "Installation Instructions". Copies of the 337 shall be provided to the I.A. returning the aircraft to service and the A&P mechanic performing the work. Also, a copy shall be forwarded to the local FISDO office, within 48 house of completion.		
16.2	See sample wording of 337 on page 27.		

Supplemental Instructions
Foam Pouring

(AS355 AFT Evaporator "Doghouse")

The pour foam covered by this instruction consists of a "A" and "B" component. The two components are mixed in a one to one ratio by volume. After mixing, expansion occurs at approximately a thirty to one expansion ration.

CAUTION:

Do not open cans and leave tops off. The components have an affinity for moisture.

The area to be sealed or filled with the pour foam should be clean. It is extremely important that all openings out of the area to be filled be sealed. All openings, cracks, screw holes, etc., in the evaporator assembly must be taped, covered or sealed. Failure to do so will result in liquid foam entering the evaporator through screw holes or any other unsealed areas. If the above is allowed to occur, the foam will expand inside the evaporator causing restriction to the airflow or coil which could severely diminish the capacity of the air conditioning system.

PREPARATION:

Obtain dry paper mixing cups of at least one pint capacity. Pour equal parts of component "A" and "B" into two separate cups. Pour both components in to a common dry container and mix thoroughly for approximately thirty (30) seconds. A small batch should be attempted initially. The time at which the foam will begin to mix, turn a tan color and begin to rise in the mixing cup will vary directly with temperature. Above 75 degrees F, this can occur in less than thirty (30) seconds.

The pour form supplied is considered to be vastly superior to foams found in pressurized cartridges, which are usually used for sealing purposes. The pour foam, due to its liquid state at the time of mixing, can be injected into a cavity and allowed to expand into and around the components, which are to be encapsulated. If the foam is mixed and poured prior to allowing the foam to begin rising, then full and complete encapsulation occurs. The strength and rigidity of the final product is superior.

Care must be taken in securing the two each three inch air outlet flexible ducts, four inch return air duct and the drain tubes to the evaporator. During the pouring operation, ensure that the foam does not, during the curing phase, push or cause any of the above air conditioning components to become dislodged.

DETAILED HELICOPTER WEIGHT & BALANCE DATA

FOR

INTEGRATED FLIGHT SYSTEMS

VAPOR CYCLE AIR CONDITIONING

UNIT INSTALLED IN A TYPICAL HELICOPTER, MODEL AS355E, F, F1, F2, N

PERTAINS TO KIT #355-00-011 OR –021

ITEM	WEIGHT	ARM	MOMENT
Fwd. Evaporator	10.0	17.0	170.0
Fwd. Air Dist. Ducts	4.0	32.0	128.0
Aft Evaporator and air Ducts	12.0	107.0	1284.0
Condenser Coil and Mount	20.0	133.8	2676.0
Condenser Blower	8.0	148.6	1188.8
Compressor and Mount	15.0	136.8	2052.0
Ref. Plumbing	6.0	76.9	461.4
Electrical Relay Panel	4.0	153.7	614.8
Sub-Total: (Air Conditioner)	**79.0**	**108.54**	**8575.0**

Engine Oil
Transmission Oil
Pilots (2)
Fuel

***** "FAA APPROVED DESIGN DATA" *****

SAMPLE WORDING FOR FAA FORM 337

1. INSTALLED INTEGRATED FLIGHT SYSTEMS, BELT DRIVEN COMPRESSOR VAPOR CYCLE AIR CONDITIONING KIT, P/N 355-00-011 (OR –021), IN ACCORDANCE WITH SUPPLEMENTAL TYPE CERTIFICATE #SH5947SW.

2. SUPPLIED FAA APPROVED FLIGHT MANUAL SUPPLEMENT TO OWNER.

3. SUPPLIED OPERATOR'S MANUAL AND MASTER PARTS LIST TO OWNER.

4. SUPPLIED INSTALLATION INSTRUCTIONS TO OWNER.

5. AIRCRAFT EQUIPMENT LIST WAS UPDATED.

6. AIRCRAFT WEIGHT AND BALANCE WAS COMPUTED AFTER MODIFICATION. NEW **WEIGHT & BALANCE** (C.G.) WAS COMPUTED AND INCORPORATED INTO AIRCRAFT PAPERS SUPERSEDING PREVIOUS.

---------- END OF DATA ----------

INTEGRATED FLIGHT SYSTEMS
Subsidiary of Platinum Aviation Group, Inc.
4655 Aircenter Circle
Reno, NV. 89502

OPERATOR'S MANUAL

FOR

VAPOR CYCLE
(R-134a)

AIR CONDITIONER

IN

EUROCOPTER CORPORATION
(formerly AEROSPATIALE HELICOPTER CORPORATION)

MODEL: AS355 (ALL SERIES)

WITH

KIT #355-00-011HP OR –021HP

(SINGLE CONDENSER BLOWERS)
By
Enviro Systems, Inc.
Or
Air Movers, LLC.

ISSUED: MAY 14, 1993
REVISED: JAN. 5, 1996
REVISED: JULY 6, 1999
REVISED: February 21, 2008

(with EPA/R-134a data W/ESTER oil)

INDEX

ii. CHANGES TO STC, KITS, COMPANY NAME:

In 1985, the Federal Aviation Administration awarded Consolidated Aire Systems of Grand Prairie, Texas, a Supplemental Type Certificate for a belt driven freon air conditioning system under STC# SH5947SW, covering the Aerospatiale Helicopter Corporation models AS355E, F, and F1. Consolidated Aire Systems ceased business in 1987.

The STC was sold to Integrated Flight Systems, Inc. of Colorado Springs, Colorado, acquired the Supplemental Type Certificate. At the same time that the name was changed on the STC and new Flight Manual Supplements were issued, the model F2 was added. In May 1993 the model "N" was added.

All current series of the AS355 helicopters are now covered by the STC. Kit #355-00-011 or –021 are applicable to all models of the AS355 series helicopter. These kits are compatible with utility, corporate and EMS configurations without any changes being required to the air conditioning system.

Present management of Integrated Flight Systems, Inc. are the same as in 1979 when the original STC for freon air conditioning was awarded by the Denver Aircraft Certification Office of the Federal Aviation Administration for the AS355 series. Although name changes of the firm have occurred, the philosophy of building a superior quality, lighter weight and higher performing unit have never deviated.

Numerous product improvements have taken place since the original STC was awarded to the same management team. Many ABS/plastic parts which were formerly vacuum formed are now constructed of high quality fiberglass. This prevents warping, distortion and loss of aesthetic lines. The product has not only been enhanced but the longevity of your value has been greatly increased.

iii EPA STANDARDS - RULES

The refrigerant used in this cooling system is R-134a. NO OTHER REFRIGERANT may be substituted, directly for R-134a, at this time.

All EPA, city, State and local regulations in regard to refrigerant R-134a shall be complied with.

1.0 GENERAL DESCRIPTION:

The Integrated Flight Systems, Inc. air conditioning system covered by this report for the Aerospatiale AS355 series helicopters consists of five major components. **The kits for which this report is applicable is P/N 355-00-011 & -021**. The -011 kit **does not have** the AHC (now AEC) air conditioning drive components supplied as part of the kit. Kit –021 **does have** the AHC drive components included.

The above kits are universal. They are designed to mate to the "Corporate, Utility, or EMS Versions".

Components are:

1.1 The belt-driven compressor located immediately to the right of the main transmission.

1.2 The condenser coil and condenser blower mounted in the top aft corner of the right side baggage compartment.

1.3 Dual evaporator/fan assemblies, one mounted above the cabin and one mounted above the floor, in the nose of the helicopter.

1.4 Aft evaporator fan is mounted above the cabin roof in the "Doghouse" on the left rear side.

1.5 The refrigerant plumbing and electrical required for the above.

1.6 The forward evaporator is located at C.G. station 17.0, aft evaporator is mounted at C.G. station 107.0, the compressor is located at C.G. station 136.8, and the condenser is mounted at C.G. station 133.8.

1.7 The dual air distribution system consists of: one from the forward mounted evaporator/fan and another from the roof mounted system. Air is provided to one outlet to the left of the instrument glare shield and one to the right, mounted vertically. The aft evaporator/fan provides airflow to a new overhead duct system, which incorporates four (4) outlets.

2.0 SPECIFIC FEATURES:

2.1 The condenser coil assembly mounted in the right side baggage area is attached to the existing frames by aluminum channels. The entire coil is wrapped with a fiberglass enclosure and sealed. A seven (7) inch diameter vane axial blower pulls air through the baggage door air inlet and exhausts the air aft of the inlet. All air outlets have mounted protective screens.

2.2 The rear evaporator assembly consists of an evaporator coil fan/motor assembly and expansion valve. The coil is mounted inside an ABS enclosure with a drain line. The entire assembly mounts to a .050 doubler on the outside of the "Doghouse" and is securely fastened in place. Cool air is allowed to flow from the evaporator into two (2) each three-inch flexible ducts before entering the overhead air distribution system. The entire evaporator is foamed in place.

2.3 Return air is drawn from the cabin through the upper rear ceiling panel and by way of a 4" flexible duct into the evaporator/fan. An existing decor panel is modified to provide the return air opening, which is screened. Relocation of cabin appointments is NOT required.

2.4 The forward evaporator is mounted above the aircraft floor. It is forward of and below the instrument panel. The entire evaporator assembly is contained within an ABS cover. Air distribution is by way of two (2) flexible hoses to automotive type air outlets on either side of the instrument console glare shield.

2.5 The Cabin Environmental Control "system" consists of components located below the right side air outlet, mounted to the instrument glare shield. These air outlet assemblies, which are subject to high solar temperatures, are fabricated from fiberglass to prevent warping.

2.6 The Sanden (formerly Sankyo) SD-505 compressor is mounted onto a custom-built, 4130N steel bracket, which was specifically designed by Consolidated Aire Systems. This type compressor has been in service for many years, in both automotive and aircraft applications. The compressor is securely mounted to the 4130N steel bracket. Provision is made for belt tensioning. The bracket is attached to the double flange of the main transmission housing. It supports the compressor, allows for adjustments in a fore/aft direction and carries all imposed loads.

2.7 All civilian AS355 aircraft currently certified, with the exception of the new "N" model, are fitted with two (2) each Allison 250C20F engines producing 420 HP at maximum take off power and 370 HP, maximum continuous. The "N" model has two (2) each Turbomeca engines substituted for the Allisons. Each engine is isolated in a fireproof and burning liquid proof compartment. Each is fitted with a fire detection system. Power is transmitted from each engine to the MGB by a steel shaft with a flexible coupling. Two (2) free wheels are part of the main gear box design. AS355E, F, F1, F2 and N model aircraft differ in only five (5) ways.

1) Useful load.
2) F model incorporates dual hydraulic systems for flight control boost. An ADH supplied kit will allow all E models to be upgraded to F models.

3) F1 models feature additional increase in useful load by means of Service Bulletin 62.02.
4) F2 models feature additional increase in useful load by several design improvements, including an upgraded transmission.
5) N models feature Turbomeca engines.

2.8 The drive shaft for the air conditioning system has been specifically designed and supplied by Aerospatiale, France. It consists of two (2) DGAC (the French equivalent of the FAA) approved kits which are provided by Aerospatiale, Grand Prairie, Texas, to all customers for inclusion in this system. The kits consist of an internally threaded drive shaft, cover flange, O-ring seal, magnetic seal, and lock washer under Aerospatiale, freon "Air Conditioning Drive Modification", P/N 355A07-7052. A second kit, "Freon Drive Pulley Kit", is covered under Aerospatiale, P/N 355A82-5017 or OP07-0977. Individual part numbers for these two (2) approved kits are contained on the installation drawings. **Installation of the kits are covered under Aerospatiale Service Bulletin, 63.01 and 63.03, which are made a part of the Installation Instructions.**

2.9 A "vee" belt is used to drive the compressor from the Aerospatiale supplied right engine drive shaft pulley. The "vee" belt employed has a maximum tension of 50 lbs. The ADH (French Parent Company of Aerospatiale Helicopter Corporation) drive has been designed to withstand 50-m.daN (4424 inch/lb.) of torque. This equals 420 HP. Should the drive belt fail for any reason, the net result will simply be the loss of compressor drive and flow of refrigerant. Recirculating air will still be provided in the cabin by the blower systems. Due to the Aerospatiale factory design of the drive there is no reason that failure of the belt will interfere with any other aircraft components or systems.

2.10 A SD-505 compressor is installed. The Sanden (formerly Sankyo) compressor utilized is a five (5) piston, swash plate design, featuring five peak to peak torque cycles per revolution.

2.11 The pulley drive ratio has been reduced to approximately 1.562 to 1. The main engine drive shaft operates at a constant 6,016 RPM, at N2, thus allowing the compressor to operate at just slightly more than 3,840 RPM. A 24 VDC clutch at the compressor is utilized.

2.12 The electrical system for the air conditioning unit consists of dual, double- throw rocker switches on the cabin Environmental Control Panel. The control switch has three positions: "A/C", "OFF" and "FAN". The "FAN" position allows the evaporator fans to run for non-cooled air circulation. Evaporator fans are protected by two (2) each 15 amp circuit breakers. The "A/C" position turns on the condenser blower as well as the evaporator fans and provides electrical power to the compressor clutch for complete system operation. A single 25 amp circuit breaker is provided to protect the 7" condenser blower.

2.13 In 1996 an additional safety feature was incorporated into the electrical system. A single ten (10) amp relay and single one (1) amp circuit breaker were added into the "Master Air Conditioning Electrical Panel". These remove the condenser blower and compressor from operation in the event of a SINGLE case of exceedence of either the HIGH or LOW pressure safety switches. The one (1) amp circuit breaker is tripped and must be reset by maintenance personnel. **Air flow by the evaporator fans IS NOT interrupted.**

2.14 Two double throw rocker switches are mounted to provide "HIGH-LOW-MED" speed selection for the evaporator motors. A 50 amp circuit breaker or fuse is employed as "Master Air Conditioning System" protection. This is located on the aircraft's Master Electrical Bus located under the aft baggage compartment floor. The 50 amp circuit breaker installed is of American design (fuse is French), and ADH approved.

2.15 **Beginning in 1996, "Reduced Barrier Type Hose"** was phased in. This light weight neoprene barrier type hose, compatible with R134a refrigerant, utilizes metal crimped ferrules, which are part of the metal fittings. "O" ring type fittings are utilized at all connections.

2.16 All lines are installed per standard aircraft practice. Adel clamps or tie wraps are used as required. Butterflying of adel clamps and the use of standoffs is provided where required. Plumbing from the aft evaporator and compressor is run down through a single hole in the deck. Caterpillar grommet material is used in all aircraft lightening holes to protect refrigerant hoses from chafing, as required. The refrigerant hoses are routed from the condenser and compressor return line below the aircraft baggage floor and along the right side of the aircraft, below the cabin floor.

2.17 This can be through existing lightening holes or below the frames to the forward evaporator. They are secured in accordance with typical hose supporting as shown in AC43.13-1A or -2A. This type hose is STC'd on several aircraft applications.

2.18 Appropriate decals and placards are provided where required. These include switch and circuit breaker identification.

2.19 The vane axial blower used on the condenser is 7" in diameter. **It is purchased under IFS P/N: 050084-4 from Enviro Systems, Inc. or under P/N: 050084-6 from Air Movers, LLC.**

3.0 SCOPE: CHARGING, SERVICING, MAINTENANCE:

3.1 It is assumed by the following instructions that the personnel engaged in Charging, Servicing, or Maintenance of the system will be either an experienced air conditioning mechanic under the supervision of a qualified A & P mechanic or an A & P mechanic possessing good air conditioning skills.

3.2 Prior to charging the system with R-134a, the evaporator fans and condenser blowers should be checked for operation and direction of air flow. This is most easily done by utilizing a GPU unit for electrical power. Since the compressor is belt driven only those maintenance and operational functions that are electrically powered may be checked either in the hanger or on the ramp without running the engine.

3.3 After the GPU is connected to the aircraft and the Aircraft Master Switch is "ON", the air conditioning system may be turned "ON". Place the rocker switch on the Master Air Conditioning Control Panel to "A/C". It does not cause the compressor to run or refrigerant to be pumped. All evaporator fans will start immediately. The compressor clutch will engage and the condenser blower will start after about a four (4) second delay. This delay is known as a "soft start".

3.4 Check air flow of each evaporator fan. Determine that air is coming out of the cockpit and the cabin air outlets.

3.5 Check air flow into and out of condenser air openings.

3.6 All evaporator fans, condenser blower, compressor clutch, and air conditioning controls are 28 volt DC.

4.0 CHARGING REFRIGERANT (R-134a) INTO THE SYSTEM:

4.1 **Danger:** R-134A, particularly liquid R-134a, should never be allowed to come in contact with the eyes or skin. Under normal conditions, R-134A as a gas or vapor is an inert substance and non-poisonous. However, the discharge of the gas into an open flame or near by one can produce phosgene gas, which is highly poisonous and can cause blindness and/or death. A flame-type leak detector should therefore **Never be used** for this reason and also because of the danger of fire or explosion around an aircraft. Several electronic leak detectors are available on the market, such as the Tiff Model 5500 and others. It is highly recommended that due to the time saved in locating leaks, that the money spent on an electronic leak detector is the best investment you can make.

4.2 Never heat a cylinder of R-134a to produce additional pressure or to squeeze that last bit of refrigerant from the cylinder. If the cylinder has become cooled to the point where additional refrigerant cannot be obtained from it, the only approved method is to place the entire cylinder in a container of **warm** water. **Do not exceed 120 degrees Fahrenheit.**

4.3 Never attempt to repair a leak requiring brazing or soldering within the aircraft structure as phosgene gas, fire, or explosion can result. Remove the entire assembly from the aircraft to a safe location before attempting such a procedure.

4.4 **Caution:** Should R-134a come in contact with the eyes or skin, **Do Not** attempt first aid beyond the immediate washing of the eye or skin with clear water. A doctor should be contacted immediately for diagnosis and treatment even though the injury may be considered slight.
Repeat - Do Not attempt first aid for this condition.

4.5 The charging of the system should not be attempted unless two qualified individuals are present. The refrigerant used in this system is R-134a, and no other refrigerant is to be considered. Normal safety practices, such as wearing of gloves and the use of goggles, should be utilized as R-134a could freeze the eyeball instantly were it to come in contact with the eye. Also, frostbite could occur to areas of the skin if R-134a were allowed to come in contact.

4.6 Charging of the system is a simple procedure whether on initial or recharging after leakage repair. A set of refrigerant gauges with a minimum of three hoses should be connected to the high side and low side service ports provided.

4.7 The system is made up of two evaporator assemblies. One is mounted above the floor in the nose of the aircraft. The other is located in the "Doghouse" above the cabin roof. The compressor for this system is located to the right of the main transmission. Service ports are provided in the right side baggage compartment. The high side and low side pressure switches are readily accessible under the right side cabin floor.

Note: **Beginning in 1991, the sight glass is located on the drier.**

In June of 1995 the high pressure "Service Port" was re-located to the seventeen (17) inch line between the condenser and the receiver/drier and fitted with an "ACME" type R-134a connection on ships that have been converted from R-12 to R-134a.

5.0 OIL CHARGING: R-134a refrigerant

5.1 Prior to the use of R-134a refrigerant, R-12 refrigerant was used in all IFS systems. The properties of R-134a refrigerant and the various types of oil used with this refrigerant are completely different than those found in the R-12 previously used.

Primary difference is that with R-12, oil was frequently added to new systems, which due to the nature of the refrigerant and oil, allowed the oil to circulate freely with the refrigerant throughout the system and return to the compressor. This was due to the ability of the R-12 to absorb the oil and the compatibility of the R-12 and the mineral oil used with that refrigerant.

The oils used with R-134a **DO NOT** dissolve into the R-134a in the same manner as those described in the paragraph above. **For this reason, additional oil, other than that in the compressor, should NOT be added to a new system.** This is particularly true when "barrier type hose" is utilized.

Several years ago, prior to the invention of "barrier type hose" the single and double braided neoprene type hoses, then in use, needed oil added to the system in order to seal the inner lining of the hose. **This is no longer true.**

5.2 **The Sanden (formerly Sankyo) compressors use a 500 viscosity SP-20 type oil (green label) or a "ESTER" type oil (yellow label). No other type oil can be utilized, especially "PAG" types.**

6.0 INITIAL CHARGING:

6.1 After the system has had all lines completely installed, with the exception of the two (2) lines at the receiver/drier, connect the refrigerant charging manifold to a cylinder of R-134a. Allow R-134a, in the form of vapor, to flow though both sides of the manifold by opening each of the valves.

This will flush any minor debris from the lines as well as expelling any air present and drying the system. Continue until a steady stream of vapor has been noted at both of the lines coming to the receiver/drier. Un-seal the receiver/drier. Place refrigerant oil on both line fittings and the male threads of the receiver/drier, and tighten the fittings. Open both valves and pressurize system. Allow approximately 50 to 70 pounds of refrigerant pressure to build up within the system. Close the valve on the cylinder of R-134a. An electronic leak detector should be utilized to check all fittings, hoses, and sockets. Tighten any leaking connections or make repairs as necessary to eliminate leaks. Shut off and disconnect hose from the refrigerant cylinder. Connect the hose to a regulator mounted on a cylinder of dry nitrogen. Purge regulator to center manifold hose. **Close low side valve (left) at manifold. Failure to do so can cause pressure to flow to the low side (left) gauge. Failure of gauge can result.**

Pressurize system to 300 PSI minimum.

6.2 After the system has been rechecked with the leak detector and it is determined that no leaks exist, disconnect the charging hose from the manifold set to the cylinder of nitrogen. Open the valves allowing the R-134a and nitrogen within the system to be collected into an EPA approved recycling unit (expelling of refrigerant is not allowed).

6.3 Connect a vacuum pump to the center manifold hose. Open both valves and evacuate the system for a minimum of twenty minutes. After twenty minutes of vacuum pump operation, the low side gauges should read approximately 30" of vacuum at sea level. (Note: For each 1,000 foot rise in altitude above sea level a decrease below 30" of vacuum of 1" per one thousand foot rise in altitude will occur.)

Adding R-134a refrigerant to the system: NEW PROCEDURE

6.4 Close both the manifold valves and connect the center charging hose to a cylinder of R-134a. Open the valve on the cylinder. Purge the charging hose by loosening it at the charging manifold's center hose. **ONLY THE HIGH SIDE VALVE OF THE CHARGING MANIFOLD MAY NOW BE OPENED. This is a change from previous procedures where BOTH the high and low side valves were opened.**

6.5 The combination of the vacuum still existing and the pressure in the R-134a cylinder transfers the R-134a from the cylinder into the system, **on the high side only**, without the compressor running. If a scale is available, the cylinder may be pre-weighted and **four pounds of refrigerant R-134a added to the system**. No additional refrigerant should be added after the system is in operation.

6.6 The system is now ready for operation. **This must be performed on the flight line with the engine at 100%.** Close the manifold valve on the high side. As soon as the "A/C" Master Control Switch is turned to "A/C" all 28 VDC evaporator fans will immediately begin operation (see SECTION 3.3).

6.7 If, after the system has been in the "A/C" mode for at least 2 minutes and cooling is not being accomplished, then check all circuit breakers.

Determine that 28 VDC power is available for control circuitry. Check the operation of the relays and contactors.

6.8 After the compressor has come on line, the entire system is operational. The R-134a cylinder valve should be closed initially in order to get an accurate reading on the low side gauge of the "system pressure". The reading on the gauge should not be allowed to go below 10 PSI as this will indicate that the low pressure safety switch is possibly set too low. It will disconnect the electrical power to the compressor clutch and condenser blower if allowed to open. Open or close the cylinder valve as required to monitor the flow of R-134a from the cylinder into the low side of the system, if additional R-134a is needed.

The sight glass located in the top of the receiver/drier may be easily seen with a flash light and inspection mirror. The sight glass should be closely monitored and a stream of what would appear to be air bubbles may be noted at this time. **DO NOT** continue charging the system with vapor R-134a.

Should additional charging be required, do so with the cylinder in the **upright position only**. At no time should the cylinder be turned upside down to allow liquid to enter the system as this can cause "slugging" of the compressor and damage to the reed valves. Charge the system, if required, until the stream of bubbles disappears and the sight glass becomes clear. It should be noted that pressure on the low side with the R-134a cylinder valve closed can vary depending on the temperature in the cabin and the O.A.T.

6.9 At this point, the **minimum** amount of R-134a is in the system and charging should cease temporarily. If the outside air temperature is 85 degrees F, or more, the amount of R-134a in the system with a clear sight glass, is usually satisfactory. However, if the temperature is less than 85 degrees F, particularly if it is in the 60-70 degree F range, approximately 8 ounces of additional R-134a may be required to be added into the system, by weight.

6.10 The **OPTIMUM METHOD OF DETERMINING THE CORRECT CHARGE** is the obtain at least four digital thermometers and place them near the return air and the discharge air of each evaporator. R-134a can then be added or deleted, as required, until the highest T.D. is noted, per the paragraph below. **At that time, the correct amount of refrigerant is installed.**

6.11 A test sheet should be completed noting the average cabin temperature, the temperature of the return or entering air to all evaporators, and the discharge air from the evaporators, at the nearest point. If a **temperature differential (T.D.)** of less than 20 degrees Fahrenheit with a humidity of 30% or less is recorded through the evaporators at sea level, the system should be considered as having possible defects which will need investigation. At altitudes above sea level, less than 20 degrees Fahrenheit temperature difference may be recorded at a humidity of 30% or less. This is due to less dense air moving more rapidly through the evaporators.

6.12 **EFFECT OF HUMIDITY ON T.D.:**
It should be noted that if measurements are taken and entered on a test sheet in accordance with 6.10, that similar measurements made at a later date, when the humidity is considerably higher, will dramatically change the T.D.

The higher the humidity, as compared to a previous T.D. reading taken with a low humidity, will result in a lower T.D. The reason for this lower T.D. measurement is that when a test is performed at lower humidity, only **"SENSIBLE HEAT"** is being removed. With higher humidity, a different condition exists. It requires that **"LATENT HEAT"** containing moisture borne heat must first be removed prior to the removal of the sensible heat.

7.0 RECHARGING OF THE SYSTEM:

7.1 If the system is found to be completely empty of R-134a, a set of charging gauges should be connected to both the high and low side service ports and to a cylinder of R-134a. Purge the charging hoses from the cylinder to the service ports with R-134a vapor. Open both the low and high side charging valves and allow pressure from the cylinder to equalize through the system until at least 50 PSI is noted. Utilizing an electronic leak detector, check all fittings on the system to determine the point of leakage. Any fitting indicating an oily or dirty condition is a prime suspect.

7.2 After the leaks have been found and corrected, pressurize the R-134a in the system with dry nitrogen as in 6.1. Re-check for leaks. Collect the R-134a in the system with an EPA approved device. Connect a vacuum pump to the center charging hose and evacuate the system for a minimum of 20 minutes from both the high and low sides. **If the system has been allowed to become contaminated, then the receiver/drier should be replaced before recharging the system.** In no case should the system be allowed to remain open for more than a few minutes without a new receiver/drier being installed.

7.3 **It is always good air conditioning practice to replace the receiver/drier whenever it is suspected that moisture has contaminated the system.**

7.4 The balance of the recharging procedure is exactly the same as pointed out previously under the **Initial Charging Operation.** A judgment must be made as to the amount of oil, if any, lost at the point of leakage. Additional oil may be required to be added to the system. **If the refrigerant has been expelled rapidly by the rupture of a line or similar situation,** then one (1) or two (2) ounces of refrigerant oil of the type previously specified should be applied to the system at this time and immediately prior to charging of the system with R-134a

7.5 **Adding excessive amounts of oil can lower the systems performance.**

8.0 SERVICE:

8.1 Normally service will not be required on a properly installed **Integrated Flight Systems** unit. Routine and seasonally dictated operations, such as checking the R-134a refrigerant charge will be listed under the Maintenance section. The question is often asked, "How often should I add refrigerant to my system?" The answer is, "Never". Point is that either a system has a leak or it has none, therefore requiring no service. We recognize the fact that while the above is true, that due to vibration inherent in helicopter operations and the environment in which it is installed, leaks can occur, usually due to vibration. The location, type of equipment used, and other items will thus be addressed under the topic of maintenance.

9.0 MAINTENANCE: (To Accomplish Continued Airworthiness)

9.1 An **Integrated Flight Systems, Inc.**, unit is designed to be as maintenance free as possible. It incorporates in the design components that have proven themselves to be highly reliable after more than fifteen (15) years in the selection process.

"IN GENERAL" the IFS air conditioning system, is "on an as required" maintenance schedule.

Few components require specific hours of in Service Inspections and none require Time Life replacement of components for "Continued Airworthiness".

It is suggested that at each periodic inspection, whether at 50 or 100 hour intervals, at least a visual inspection be accomplished to the following items:

1. Compressor
2. Compressor Clutch Bearing
3. Compressor Mount
4. Refrigerant Hose and Fittings
5. Evaporator Fans and Mounting
6. Condenser Blowers and Mounting
7. Condenser/Evaporator Coils

9.2 In addition to the above inspections, the compressor should be inspected for a true turning and free clutch. One mechanic should turn the tail rotor blade while another observes the belt and clutch face plate. Turn system to "A/C" and check magnetic operation of clutch plate.

9.3 The compressor mounts should be inspected for possible cracks, deterioration and that all bolts are firmly attached.

9.4 **Clutch Bearing Inspection: (Will be replaced upon failure)**

9.5 **(Intentionally left blank)**

9.6 Inspect hoses for general condition, cuts or swelling. Replace, as required.

9.7 **Forward fan motor** is a permanent magnetic type.
No repair is recommended. If worn or de-graded, **replace.**

9.8 **Aft evaporator fan** motor is a permanent magnetic type.
No repair is recommended. If worn, or de-graded, **replace.**

Run both of the evaporator blower/fans in the "FAN" position and perform visual inspection of the assemblies to see that foreign materials have not been ingested into the blower/fan which might cause blade damage. The blower/fans should also be run at the various speeds available to check motor operation.

9.9 **Condenser Blower:** (Vendor: Enviro Systems, Inc. or Air Movers, LLC.) Two (2) brushes are located under the motors aft end cap on each side of the motor. **Inspect brushes every 200 hours for wear.** Note position relative to curvature of armature. Inspect brush for wear. Replace if wear is excessive. **Install new brushes and run at 12 VDC** (utilizing an independent power source) **until seating occurs on 70% of the surface.** This action will greatly enhance brush life.

9.10 The fins of the condenser coil, as well as the evaporator coils, should be checked for cleanliness and that they are straight. If damage has occurred to the fins, a fin comb should be utilized to put them in like-new condition.

10.0 TROUBLESHOOTING:

10.1 Should the system not perform as expected, either because of unreasonably erratic pressure readings, total lack of cooling or reduced cooling, it will be necessary to obtain a trouble shooting guide if the A&P mechanic is unfamiliar with the characteristics of a mobile air conditioning unit. The symptoms, diagnosis and corrections are so numerous for various conditions that we will not attempt to list them all in this guide.

10.2 The high and low pressure safety switches should be checked if electrical power is lost to the compressor clutch. These are in series, and they should be checked from their electrical source which is the 25 amp condenser circuit breaker.

10.3 Always check system R-134a pressure first, as a leaking unit may have caused the low pressure switch to open. This switch is set at 10 to 15 PSI and requires that pressure, or greater, to close. **An open switch will cause the 1 amp circuit breaker to "POP". This does not indicate an electrical malfunction.** It is caused only by the fact that the low pressure switch is open.

10.4 Failure of the condenser blower or coil blockage could result in the high side switch opening. **Both switches are designed to reset automatically (SEE SECTION 2.13).**

11.0 COMPRESSOR:

11.1 The compressor installed is a Model #SD-505 manufactured by Sanden (formerly Sankyo) International.

11.2 A copy of the Sanden Service Manual can be supplied or down loaded from the Sanden Web site.

11.3 No maintenance, other than **"clutch bearing" or "coil replacement"** should be attempted in the field.

11.4 **Drive belt is P/N 060010.**

12.0 REFRIGERANT CYCLE:

12.1 A typical mobile vapor cycle air conditioning schematic can be obtained. It is will be based on automotive applications, and thus the temperatures and pressures shown are not representative of the **Integrated Flight Systems, Inc** system installed in this application. It will show "basic concepts only".

13.0 EVAPORATOR FANS:

13.1 If either the forward evaporator fan or aft evaporator fan fails to run, confirm that the Aircraft Master Switch is in the "ON" position and the Air Conditioning control Switch is placed to "FAN". If the fans still do not run, determine that electrical power is available to the aircraft from an outside power source, such as a GPU or the aircraft power source. Inspect the circuit breakers in the Master Air Conditioning Electrical Panel.

13.2 Determine if electrical power is being supplied to the wire, which is the power source to each motor. If power is available, it will be necessary to test with a volt meter that electrical power is being supplied directly to the motor by the appropriate wire. If power is being supplied, and the motor is properly grounded, then it can be assumed that the motor has failed.

13.3 The forward fan motor may be disassembled from its housing and the screws in the motor case removed to allow removal of the motor. A replacement motor should be obtained from **Integrated Flight Systems, Inc.** and reinstalled in a similar manner. **Do not attempt disassembly or field repair. Motor is: IFS P/N: 050052.**

13.4 The aft evaporator fan motor may be dis-assembled from its support plate to allow removal of the motor. **A replacement motor is ordered as a unit. Motor is: IFS P/N 050052-1.**

14.0 CONDENSER BLOWER:

14.1 The condenser blower may be checked by placing the Aircraft Master Switch "ON" and then placing the Air Conditioning Control Switch to the "A/C" position. If the 25 amp circuit breaker is not open, then power should be supplied directly to the condenser blower after about a four (4) second delay. The blower is mounted in the right side baggage area, above the aircraft's battery.

14.2 If air is not being exhausted, a volt meter should be utilized to determine if the power is being supplied through the switch and relay to the appropriate wire. Check that all electrical terminals are secure and that power is directed to the motor's terminals. Inspect ground. If it is determined that the motor has failed, the screws holding the blower assembly in place should be removed. The blower assembly must be removed as an entire assembly and should be replaced by ordering **IFS P/N: 050084-4 or (as of 08/99) P/N: 050084-6.**

15.0 CONDENSER REMOVAL:

15.1 To remove the condenser the entire assembly may be unbolted and removed once the refrigerant lines have been disconnected.

NOTE: Before removing any lines, capture all R-134a from the system slowly so as not to deplete the refrigerant oil. All refrigerant MUST BE CAPTURED using an EPA approved recovery unit.

Normally it would not be necessary to remove the condenser assembly unless high head pressures or physical examination indicates that severe damage has occurred. If dirt or other obstructions have formed on the aluminum fins, thereby obstructing the flow of air and reducing the efficiency of the condenser, it can usually be cleaned in place.

16.0 RECEIVER/DRIER:

16.1 The receiver/drier may be replaced, if required, by discharging the R-134a from the system through a refrigerant hose or set of charging gauges. Again all R-134a refrigerant MUST BE CAPTURED. Normally, the receiver/drier will not need replacement unless one of two factors is present:

(a) The system has been left open for some time and may be contaminated by air and/or moisture.

b) The receiver/drier has become plugged which is evident by a large temperature differential on either side of the receiver/ drier. Normally, the liquid line to and from it would be of approximately equal temperature and will be quite warm. If one side is relatively warm and the other side is very cool or attempts to frost, then blockage of the receiver/drier has been determined. The receiver/drier should be removed and a new one installed in its place. The part is P/N" 090016-5 ("O" ring type). The charging instructions found on Pages 8, 9, 10, 11 and 12 should be followed in charging the system.

17.0 EXPANSION VALVES:

17.1 **Beginning in 1991**, a phased in use of "O" ring type expansion valves, refrigerant fittings and coils was seen. **Both expansion valves are identical, "O" Ring type, P/N: 090002-"0".**

17.2 It is important that the sensing bulb be clamped tightly to the **suction line** in the same manner as removed (always use a clamp to establish good contact). Also, the suction line is to be clean, so good contact takes place between the sensing bulb and the line. This area must be re-insulated as in the original manner. Recharge and leak test as previously stated.

18.0 REFRIGERANT HOSES:

18.1 **Reduced Barrier Type:**
This type hose, which is lighter and has a smaller outside diameter than the previously used hose, was introduced in 1996. It utilizes crimped ferrules made onto the fittings. This type hose requires SPECIAL CRIMPING TOOLS due to its small external size.

18.2 The above "NEW" hose has the same INSIDE diameters as that previously used.

19.0 SYSTEM OPERATING LIMITATIONS:

19.1 Below 60 degrees Fahrenheit, it may be found that the air conditioning compressor will not come on line and remain in operation (may trip one (1) amp circuit breaker). This is due to the fact the coolness of the air available across the condenser does not allow the refrigerant system to maintain sufficient low side pressure to keep the safety low pressure switch from tripping the compressor "off line" by utilizing the built in safety features.

19.2 Beginning in 1996, the low pressure switch has been changed to a non-adjustable type and relocated under the cabin floor, outboard of the keel. Part number will be 050107 (set at 6 PSI out, 34 PSI in) or 090014 (set at 7 PSI out, 22 PSI in).

19.3 Above 130 degrees F, inlet temperature to the condenser, the high pressure safety switch may open, "POP" the 1 amp circuit breaker and remove the compressor and condenser blower from operation.

Department of Transportation—Federal Aviation Administration

Supplemental Type Certificate

Number **SH5947SW**

This certificate, issued to **Integrated Flight Systems, subsidiary of Platinum Aviation Group, Inc.**
4655 Aircenter Circle
Reno, Nevada 89502

certifies that the change in the type design for the following product with the limitations and conditions therefor as specified hereon meets the airworthiness requirements of Part 27 and Part 21.29 of the Federal Aviation Regulations.

Original Product—Type Certificate Number: H11EU
Make: Aerospatiale (S.N.I.A.S.)
Model: AS355E, AS355F, AS355F1, AS355F2, AS355N

Description of the Type Design Change: Installation of freon air conditioner system with single condenser blower configuration in accordance with Integrated Flight Systems, Inc. Drawing List Report No. DL-8, Revision A, dated June 3, 1985, or later FAA approved revision; or dual condenser blowers configuration in accordance with Integrated Flight Systems, Inc. Drawing List Report No. DL-8-1, Revision N/C, dated May 14, 1993, or later FAA approved revision.

Limitations and Conditions:
FAA Approved Rotorcraft Flight Manual Supplement dated June 5, 1985, or later FAA approved revision is required. Compatibility of this modification with previously installed equipment must be determined by installer.

This certificate and the supporting data which is the basis for approval shall remain in effect until surrendered, suspended, revoked, or a termination date is otherwise established by the Administrator of the Federal Aviation Administration.

Date of application: **May 14, 1984**
Date of issuance: **June 7, 1985**
Date reissued: **3/29/88; 10/27/88; 4/30/91; 8/22/01**
Date amended: **3/29/88; 10/27/88; 7/14/93**

FEDERAL AVIATION ADMINISTRATION

By direction of the Administrator

David T. Grossman (Signature) Rotorcraft Program Manager
Denver Aircraft Certification Office
Northwest Mountain Region, Denver, Colorado
(Title)

Any alteration of this certificate is punishable by a fine of not exceeding $1,000, or imprisonment not exceeding 3 years, or both.

This certificate may be transferred in accordance with FAR 21.47.

FAA FORM 8110-2(10-68)

INTEGRATED FLIGHT SYSTEMS, INC.
8345 BLUE GILL DRIVE
FALCON, CO 80831

FAA APPROVED

HELICOPTER FLIGHT MANUAL SUPPLEMENT

FOR

AEROSPATIALE HELICOPTER CORPORATION

MODEL: AS355E, F, F1, F2, N

REGISTRATION NO.: _____

SERIAL NO.: _____

This supplement must be attached to the DGAC/FAA approved Rotorcraft Flight Manual, dated January 16, 1981 or later FAA Approved revisions when an Integrated Flight Systems, Inc., air conditioning system is installed in accordance with STC No. SH5947SW. The information contained herein supplements or supersedes the basic Rotorcraft Flight Manual only in those areas listed. For limitations, procedures, and performance information not contained in this supplement, consult the basic Rotorcraft Flight Manual.

FAA APPROVED: _____
for Richard E. Jennings
Manager, Denver Aircraft
Certification Field Office
2390 Syracuse
Denver, Colorado 80207

DATE: June 5, 1985

REVISED: July 14, 1993

LOG OF REVISIONS

REVISION	PAGES AFFECTED	CHANGE	FAA APPROVED
Original	1 thru 8	Original Release	James R. Arnold for, Manager, Aircraft Certification Division, FAA Southwest Region Date: 6/5/85
"A"	1 thru 8	Company name was: Consolidated Aire Systems Company name is: Av-Aire Corporation Added: Model F2	Michael H. Borfitz Manager, Denver ACFO Date: 10/27/88
"B"	1 thru 8	Company name was: Av-Aire Corporation Company name is: Integrated Flight Systems, Inc. Added: Model N	for Richard E. Jennings Manager, Denver ACFO Date: JUL 14 1993

FAA APPROVED: June 5, 1985

REVISED: JUL 14 1993

INDEX

1.0 GENERAL

The installation consists of a belt driven vapor- cycle (freon) air-conditioning system.

2.0 OPERATING LIMITATIONS

- The air conditioning system must be "OFF" during engine start.
- Operation of the air conditioning system is prohibited on one generator if total electrical load will exceed 150 amps (100 amps if AMS 07.1123 has not been incorporated).
- "MAG compass deviation may be excessive with air conditioner or fan - ON".
- The air conditioning system must be turned "OFF" to obtain the FAA approved Rotorcraft Flight Manual performance above 7000 feet density altitude.

3.0 EMERGENCY PROCEDURES

3.1 EMERGENCY PROCEDURES

- In the event of an engine failure, turn air conditioner "OFF".

3.2 D.C. GENERATOR FAILURE

- Automatic load shedding is not provided.
- Load shedding of the air conditioning system does not occur if a generator failure occurs.
- Air conditioning - "OFF"
- Ammeter to operating system - Monitor.
- Ammeter 129 amps or less (AMS 07.1123 incorporated) or
- Ammeter 69 amps or less w/o AMS 07.1123.
- Reduce electrical load - As required.
- Air conditioning - "ON", as desired.
- Ammeter - Monitor - 150 amps maximum continuous w/ AMS 07.1123

EMERGENCY PROCEDURES (continued)

3.3 EXCESSIVE TEMPERATURE, FIRE, SMOKE

In the event of any of the following, turn air conditioner "OFF":

1. Cabin or other fire.
2. Presence of smoke.

4.0 NORMAL PROCEDURES

4.1 GROUND OPERATION - ONE ENGINE - ONE GENERATOR

- Ammeter of operating generator- Monitor
- If 129 amps or less (AMS 07.1123 incorporated) or 69 amps w/o AMS 07.1123
- To turn air conditioner "ON" - Move switch to "A/C".
- To turn air conditioner "OFF" - Move switch to "OFF".
- For air circulation without cooling - Move switch to "FAN".
- Select desired blower speed for cockpit.
- Select desired blower speed for cabin.

EMERGENCY PROCEDURES (continued)

3.3 EXCESSIVE TEMPERATURE, FIRE, SMOKE

In the event of any of the following, turn air conditioner "OFF":

1. Cabin or other fire.
2. Presence of smoke.

4.0 NORMAL PROCEDURES

4.1 GROUND OPERATION - ONE ENGINE - ONE GENERATOR

- Ammeter of operating generator- Monitor
- If 129 amps or less (AMS 07.1123 incorporated) or 69 amps w/o AMS 07.1123
- To turn air conditioner "ON" - Move switch to "A/C".
- To turn air conditioner "OFF" - Move switch to "OFF".
- For air circulation without cooling - Move switch to "FAN".
- Select desired blower speed for cockpit.
- Select desired blower speed for cabin.

4.2 NORMAL PROCEDURES

GROUND AND FLIGHT OPERATIONS

- Ventilation Control - As desired
  (Close for cockpit/cabin cooling)

- Air conditioning Control Switch - As desired.

- Air conditioning Fan Speed Control Switches - As desired. (cockpit and cabin)

- Turn AIR CONDITIONER - "OFF" to obtain correct Magnetic Compass heading.

5.0 PERFORMANCE:

The air conditioning system must be turned "OFF" to obtain FAA approved Rotorcraft Flight Manual performance above 7000 feet density altitude.

MANUFACTURER'S DATA

Kit 355-00-011 with STANDARD interior

A.0 SYSTEM AND DESCRIPTION

The air conditioning installation consists of a belt driven vapor cycle air-conditioning system using R-134a as the refrigerant.

The air conditioning system provides for cabin comfort during all operations both on the ground and in flight. During ground operations when either engine is running, cooling may be provided. Controls for the air conditioning system are to the right of the instrument panel. Two switches are provided. The Master Control Selector consists of a rocker type switch, labeled "A/C", "OFF", and "FAN". Selecting the "A/C" position turns on the system's dual evaporator fans, condenser blower, and belt driven compressor. The second rocker switch provides for "HIGH", "LOW", AND "MED" evaporator fan speed selection for the cockpit. Another three (3) speed evaporator fan switch is located in the aft cabin. Thermostatic temperature control is provided. A 5 amp circuit breaker below the thermostat control disconnects power to all relays.

A high pressure safety switch, located on the condenser, disengages the compressor and stops operation of the system in the event of excessive refrigerant pressures. This can occur due to failure of the condenser blower or restricted air intake. The switch will automatically reset itself and the system will cycle on again when the pressures are reduced below a predetermined point.

The evaporator fan system may be used anytime air circulation is desired. This is accomplished by placing the selector switch in the "FAN" position.

Temperature control is provided.

Single 7" Vane Axial Condenser Blower (1):
System electrical protection is provided by 2 each 15 amp, 1 each 25 amp, and 1 each 1 amp circuit breakers. Labeled EVAP, EVAP, COND, and RESET on the Air Conditioning Electrical Control Panel. This panel is located in the right side baggage compartment above the battery.

Electrical "soft start" is provided. When the "A/C" switch is positioned to "ON", both evaporator fan/blowers immediately start causing a 20 amp draw. A timer delays the condenser blower and clutch operation for about 4 seconds, when an additional 21 amps are added to the system load.

MANUFACTURER'S DATA (continued)

A-1 **ELECTRICAL LOADING** **(7" Enviro System, Inc. blower)**
The maximum electrical requirements of the air conditioning system are as follows:

Condenser Blower	1 each @	20 amps	=	20 amps
Compressor	1 each @	2 amps	=	2 amps
Evap. Fan (Fwd)	2 each @	7 amps	=	14 amps
			TOTAL	**36 amps**

LOAD SHEDDING

Automatic electrical load shedding will not occur if a D.C. generator failure occurs.

For ground or in-flight operation, when safe operator of the system can be assured with only one generator operating, the air conditioner may be utilized. Maximum amperage per generator if 100 amps prior to AMS 07.1123 and 150 amps per generator after incorporation.

NOTE: ** During conditions of high D.C. current use, such as battery recharging after engine start, use of landing lights, etc., it is possible that the electrical power requirements with the air conditioning "ON" may exceed the rated output of one generator (150 amps, max.).

A-2 WEIGHT AND BALANCE

Weight and Balance must be computed with air conditioning system installed. Approximate weight is 79 pounds. See Installation Instructions supplied with kit for actual weight.

SERVICE Bulletin

AS 355

No. 63.01

OPTIONAL

SUBJECT : MAIN ROTOR DRIVE

Accessory drive provisions on combiner gearoox

REMARKS :

The purpose of this amendment is to incorporate the part numbers of the special tools, to detail the accomplishment instructions and to specify the part number of an optional equipment (fixed part) requiring this modification.

Corresponds to modification : AMS 355A.07.7052

OFFICIAL APPROVAL

D.G.A.C. approved

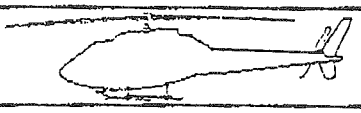

1.- PLANNING INFORMATION

A - EFFECTIVITY

All AS 355 - E and F helicopters

B - REASON

To make it possible to drive an optional equipment with a 10 kW max. consumption.

C - DESCRIPTION

- Replace pinion locking nut, nut retainer and cover on combiner gearbox input pinion shaft

The new nut is thus capable of receiving a pulley that will be fitted as a fixed part of the optional installation.

D - COMPLIANCE

On production line	:	Aircraft S/N 5109
Retrofit action	:	By the user
Spares	:	On new productions

E - APPROVAL

Approved by Bureau Véritas on January 12, 1981

Amendment 1 : 82 - 5
81 - 19

★ SOCIETÉ NATIONALE INDUSTRIELLE aerospatiale ★
★ DIVISION HÉLICOPTÈRES – SERVICE TECHNIQUE APRÈS-VENTE – Boîte Postale 13 – 13722 MARIGNANE (FRANCE) ★

F - MANPOWER

1 mechanic : 2 hours approx.

G - MATERIAL – Cost and Availability

Lead times and prices will be given on the order acknowledgement form.

H - TOOLING – Cost and Availability

Mechanic's standard tools

Special tools defined in para. 3 BC

I - WEIGHT AND BALANCE

Weight : + 0.130 Kg

Moment : + 0.470 Kg

J - REFERENCES

Refer to Figure 1

Modification No. 355A 07.7052 MUST be embodied in aircraft S/N 5001 through 5108 so as to install the air conditioning system fixed part which forms the subject of Service Bulletin No. 83.03 (Mod. AMS 350A.07.0977).

2.- ACCOMPLISHMENT INSTRUCTIONS

A - PRELIMINARY STEPS

Remove upper cowlings from MGB

B - OPERATIONAL PROCEDURE

As per Figure 1 and section A-A

- Remove the following from L.H. side of combiner gearbox :
  - blanking plate P/N 355A.32.2051.00 (4)
  - nut retainer P/N SLW 40194 M 50 3P (8)
  - nut P/N SLN 40194 M 50X 1-5 3PRH (7) using spanner P/N 68.01.355A.32.0200.00
  - spacer P/N 355A.32.2048.20 (6)
  - lockwasher P/N 355A.32.2047.20 (5)
- Fit at same locations :
  - 1 lockwasher P/N 355A.32.2100.20 (1)
  - 1 special nut P/N 355A.32.2099.20 (2) using spanner P/N 68.01.355A.32.2099.20
    Torque loading : 13 - 16 m.daN
  - 1 blanking plate P/N 355A.32.2101.00 (3)
    Nuts to be torque loaded to 0.33 - 0.39 m.daN
- On L.H. side of combiner gearbox :
  - replace blanking plate P/N 355A.32.2051.00 by blanking plate P/N 355A.32.2101.00

NOTE : Torque loading values are given wet using grease AIR 4206 (for ref. : coefficient is 0,55)

C - IDENTIFICATION

- Record compliance with modification in aircraft documents.

Combiner gearbox assy P/N 355A.32.0200.01 is changed to .02
Spares supply ref. is 355A.32.0200.02.51

D - OPERATING INSTRUCTIONS

Not applicable.

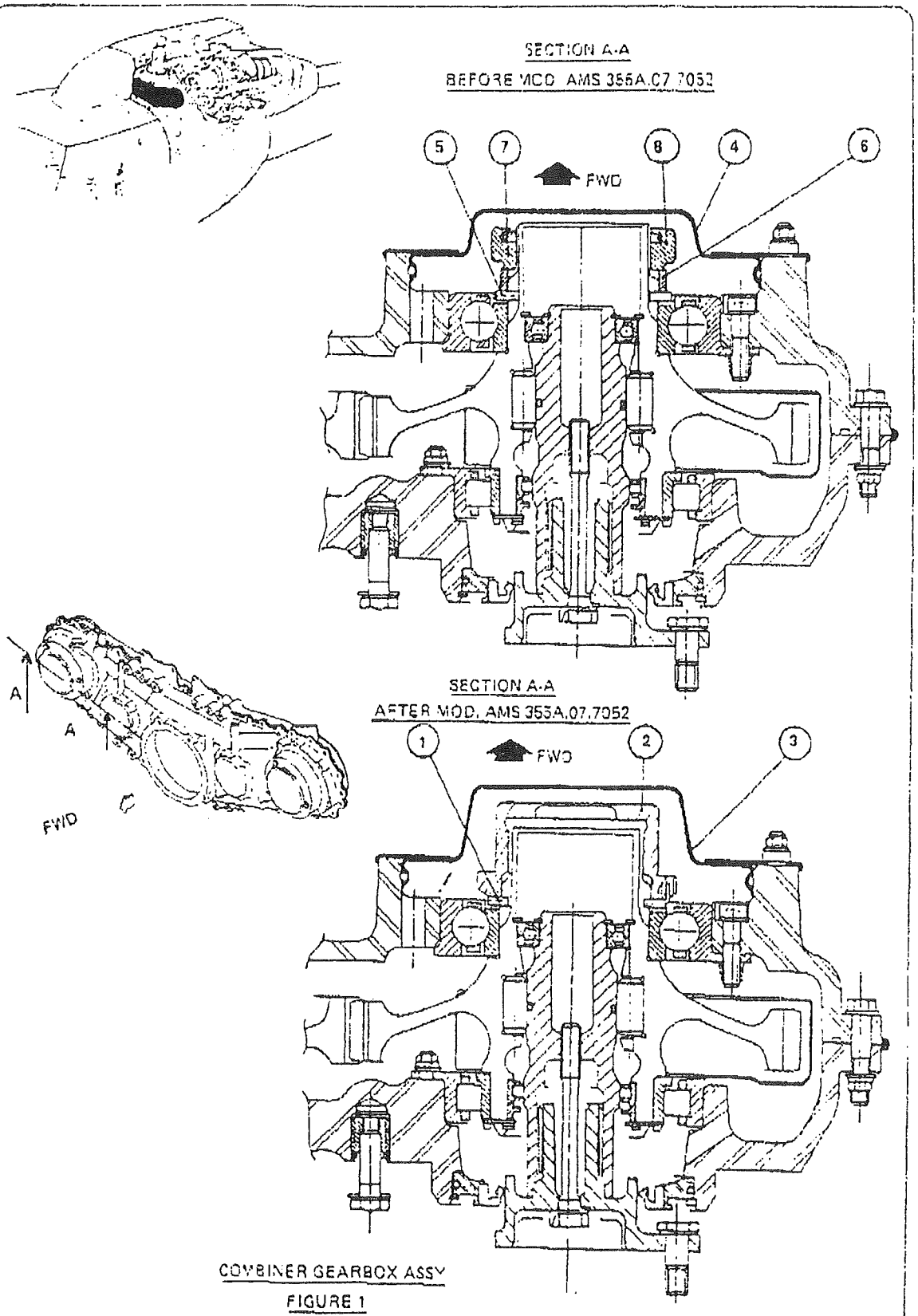

COMBINER GEARBOX ASSY

FIGURE 1

3. MATERIAL INFORMATION

A - BASIC INFORMATION

The bill of material required for the application of this Service-Bulletin has been established for :

1 helicopter AS 355 - E and F

B - COMPLETE BILL OF MATERIAL

AMS 355A.07.7052

NEW PART NUMBER		Quantity	Item	DESCRIPTION	FORMER PART NUMBER		Quantity	INSTRUCTION EFFECTIVITY
355A.32.2099.20	A	1	2	Special nut	SLN40194M50X1 - 5BP9H	G	1	
355A.32.2100.20	A	1	1	Lockwasher	355A.32.2047.20	F	1	
355A.32.2101.00	A	2	3	Blanking plate	355A.32.2051.00	F	2	
				Spacer	355A.32.2048.20	G	1	
				Nut retainer	SLW40194M50BP	F	1	

KEY

A	New	Included in kit
B	Interchangeable	
C	Already used on aircraft	
D	Local manufacture	Not in kit
E	To be ordered separately if not in stock	

F	Cancelled
G	Re-usable on other assemblies
H	May be modified
I	To be maintained in service until stock is exhausted

C - COMPLETE BILL OF TOOLS

NEW PART NUMBER		Quantity	Item	DESCRIPTION	FORMER PART NUMBER		Quantity	INSTRUCTION EFFECTIVITY
68.01.355A.32.0200.00	E	1						
68.01.355A.32.2099.20	E	1						

KEY

A	New	Included in kit
B	Interchangeable	
C	Already used on aircraft	
D	Local manufacture	Not in kit
E	To be ordered separately if not in stock	

F	Cancelled
G	Re-usable on other assemblies
H	May be modified
I	To be maintained in service until stock is exhausted

D PROCUREMENT CONDITIONS

Order the required quantity :

xXx modification kits 355A.07.7052 as per Service-Bulletin No. 63.01

from

AEROSPATIALE
Service Central Rechanges
13725 MARIGNANE CEDEX
(FRANCE)

or TELEX AISPA.A.410875F
MAAV.AOG.410969F

IMPORTANT NOTE : PLEASE ALWAYS SPECIFY ON THE PURCHASE ORDER, THE MODE OF TRANSPORT, THE DESTINATION AND THE SERIAL NUMBERS OF THE AIRCRAFT TO BE MODIFIED.

F - MANPOWER

1 mechanic : 1 hour approx.

G - MATERIAL – Cost and Availability

Prices and delivery times shall be given on order acknowledgement form

H - TOOLING – Cost and Availability

Standard mechanic's tools.

I - WEIGHT AND BALANCE

Weight : + 0.570 kg

Moment : + 2.058 mdaN

J - REFERENCES

Refer to Figure 1

On aircraft S/N 5001 to 5108, modification 355A.07 7052 (capability of accessory drive on combiner gearbox) subject of Service-Bulletin No. 63.01 must be applied before installing the accessory drive.

SERVICE Bulletin

AS 355

No. 63.03 | OPTIONAL

SUBJECT : MAIN ROTOR DRIVE
Accessory drive

REMARKS :
Issue 2: is intended to standardize this accessory drive

Corresponds to modification : AMS 350A.07.0977

OFFICIAL APPROVAL
D.G.A.C. approved : February 4, 1983

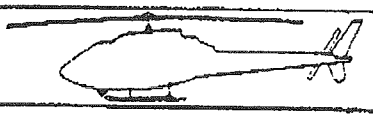

1.- PLANNING INFORMATION

A - EFFECTIVITY

All AS 355 E and F helicopters on which modification 355A.07.7052 has been embodied (Service-Bulletin No. 63.01)

B - REASON

To introduce a 6000 rpm accessory drive on combiner gearbox, capable of 10 kW maximum power with maximum belt tension of 23 daN

C - DESCRIPTION

Installation of a driving pulley on input pinion shank on RH side of MGB and of seal holder complete with seals on casing.

D - COMPLIANCE

On production line	:	Optional equipment, on customer's request
Retrofit action	:	By operator
Spares	:	Upon request

E - APPROVAL

Approved by the Service Technique Aéronautique on August 5, 1981

★ SOCIETÉ NATIONALE INDUSTRIELLE aerospatiale ★
★ DIVISION HÉLICOPTÈRES – SERVICE TECHNIQUE APRÈS-VENTE – Boîte Postale 13 – 13722 MARIGNANE (FRANCE) ★

2.- ACCOMPLISHMENT INSTRUCTIONS

A - PRELIMINARY STEPS

- Open RH side MGB cowling.

B - OPERATIONAL PROCEDURE

Refer to Figure 1

- On RH side of combiner gearbox :
  . remove blanking cap 355A.32.2101.00 (item 11)
- Position seal-holder 355A.32.2115.20 (item 4) equipped with magnetic seal 81055-1 (item 6) and O' ring 2.62 x 120.32 - 6108 (item 1)
- Install 3 washers 23118AG060 LE (item 8) and nuts (item 13).
  Torque to 0.33 - 0.39 m.daN

  NOTE : Torque loading is given for threads lubricated with AIR 4206 grease (for ref. : coefficient 0.55)
- On special nut 355A.32.2099.20 (item 14), locate pulley 355A.32.2116.20 (item 5), secure with 3 washers 23134 CA 060 (item 3) and 3 bolts 22220 BE 060.012L (item 2) ; torque to 0.60 - 0.75 m.daN

  NOTE : When installing bolts, coat threads with Loctite SCELROULEMENT SR (or OLEOETANCHE) compound.
- Lock the 3 bolts together with Z2CN 18 R 44 DO.8 lockwire (item 7)
- Close MGB cowling.

C - IDENTIFICATION

Enter the embodied modification in the aircraft log book.

D - OPERATING INSTRUCTIONS

None.

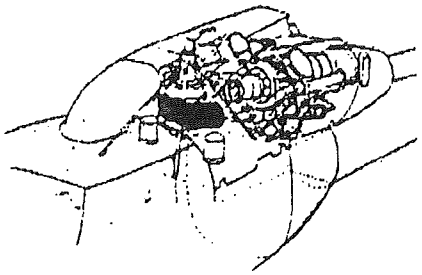

SECTION A-A
PRE MODIFICATION

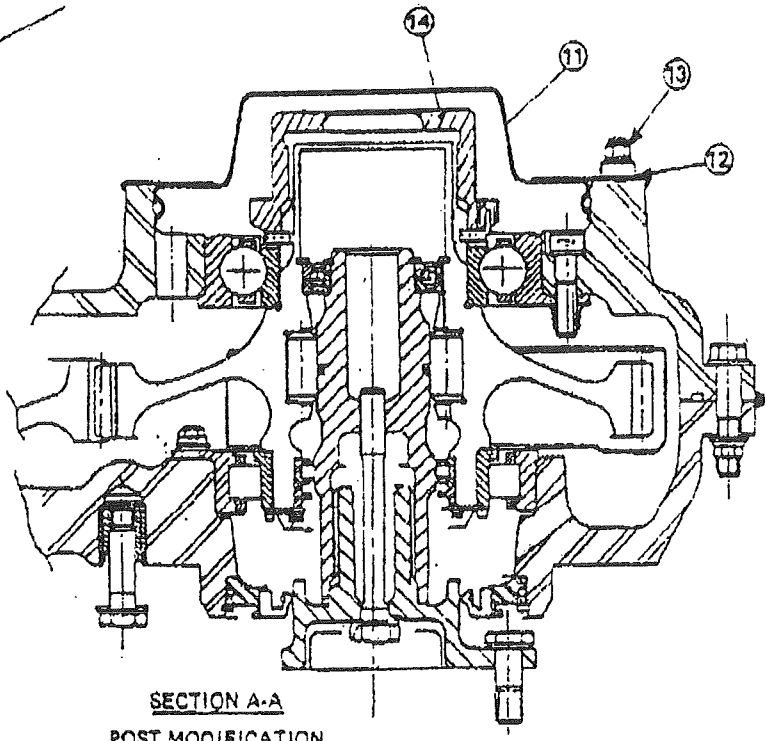

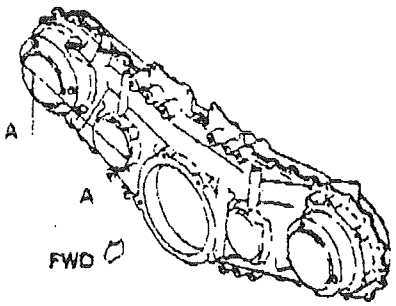

SECTION A-A
POST MODIFICATION

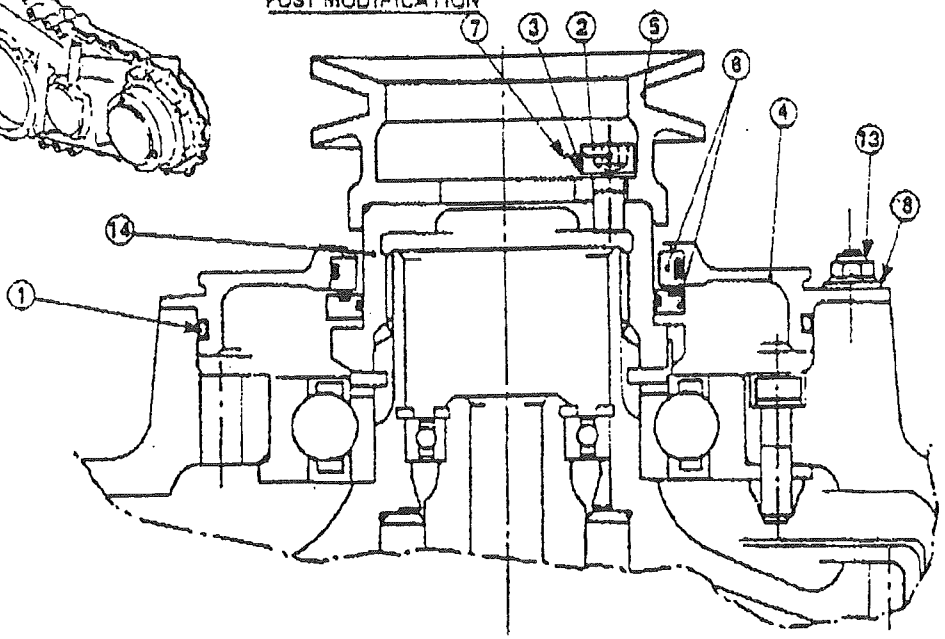

FIGURE 1

3.- MATERIAL INFORMATION

A - BASIC INFORMATION

The bill of material required for the application of this Service-Bulletin has been established for :

1 AS 355 aircraft or
1 M.G.B.

B - COMPLETE BILL OF MATERIAL

AMS 350A.07.0977 (Assembly 355A.82.5017.00)

NEW PART NUMBER		Quantity	Item	DESCRIPTION	FORMER PART NUMBER		Quantity	INSTRUCTION EFFECTIVITY
355A.82.5017.00	A	–	–	Accessory drive assy consisting of :				
2.62 x 120.32 . 6106	A	1	1	O' ring				
22220 BE 060.012L	A	3	2	Bolt				
23118 AG 060LE	C	3	8	Washer	23118 AG 080 LE	G	3	
23134 AG 060 LE	C	3	3	Washer				
355A.32.2115.20	A	1	4	Seal-holder, blanking cap	355A.32.2101.00	G	1	
355A.32.2116.20	A	1	5	Pulley				
81055.1	A	1	6	Seal				
Z2CN18R4400.8	E	AR	7	Lockwire				
841	E	AR		Loctite,SCELROULEMENT SR or OLEOETANCHE				

KEY

A	New	Included in kit
B	Interchangeable	Included in kit
C	Already used on A/C	Included in kit
D	Local manufacture	Not in kit
E	To be ordered separately if not in stock	Not in kit

F	Cancelled
G	Re-usable on other assemblies
H	May be modified
I	To be maintained in service until stock is exhausted

C - COMPLETE BILL OF TOOLS

Standard mechanic's tools

D - PROCUREMENT CONDITIONS

Order the required quantity :

X ... accessory drive units 355A.82.5017.00

as per Service-Bulletin No. 63.03

from

AEROSPATIALE
Service Central Rechanges
13725 MARIGNANE CEDEX
FRANCE

or TELEX { AISPA.A.410975F / MAAV.AOG.410969F

IMPORTANT NOTE : PLEASE ALWAYS SPECIFY ON THE PURCHASE ORDER THE MODE OF TRANSPORT, DESTINATION AND SERIAL NUMBERS OF AIRCRAFT TO BE MODIFIED.

MASTER PARTS LIST

IN

AS355 SERIES

FOR

KIT #355-00-011HP OR –021HP
(-011 without AEC Compressor Drive Kit)
(-021 with AEC Compressor Drive Kit)

WITH

SINGLE CONDENSER BLOWERS

Revised: July 2, 2021
Revised: March 29, 2002
Revised: Oct. 6, 2000
Revised: July 6, 1999
Revised: Jan 5, 1996
Revised: Dec. 1, 1995
Issued: March 10, 1993
(with EPA/R-134a data W/ESTER oil)

INTEGRATED FLIGHT SYSTEMS
MASTER PARTS LIST-355-00-011HP KIT

ITEM	DESCRIPTION	REPLACEMENT PART NUMBER
1.	BELT - VEE	060010
2.	SD 507 COMPRESSOR ASSEMBLY	
	COMPLETE W/ VEE PULLEY, 24 VDC COIL	
	"O" RING TYPE W/"SP-20" OIL	010001-3-"O"
	"O" RING TYPE W/"ESTER" OIL	010001-2-"O"
	~~"O" RING TYPE W/"R-12"~~ (OBSOLETE)	010001-1-"O"
	~~"FLARE" TYPE W/"R-12"~~ (OBSOLETE)	010001-1
	COMPRESSOR PARTS, SD 507	
3.	BEARING (ONLY): SD 507 COMPRESSOR W/5.0" CLUTCH, MFG. P/N 8543-0020	010011
4.	24 VDC COIL (GREEN WIRE), MFG. P/N: 9351-6040	050034
5.	~~IFS PULLEY (VEE)~~ (NOT SOLD SEPARATELY)	~~9053-9810~~
6.	~~PULLEY FACE PLATE 5.0"~~ (NOT SOLD SEPARATELY)	~~010012~~
	FORWARD EVAPORATOR FAN PARTS	
7.	MOTOR, FORWARD EVAPORATOR, 24 VDC, DOUBLE SHAFT	050052
8.	WHEEL, FORWARD EVAPORATOR, FAN, INJECTION MOLDED, 5/16" BORE	040007
	AFT EVAPORATOR FAN PARTS	
9.	MOTOR, AFT EVAPORATOR	050052-1
10.	WHEEL, AFT EVAPORATOR	040004-8
	CONDENSER BLOWER PARTS	
11.	7" CONDENSER BLOWER (OBSOLETE - - SEE BELOW)	~~050084-4 OR -5 OR -6~~
11.	7" CONDENSER BLOWER	IFSS 050084-7-2
	MISC. PARTS	
12.	RECEIVER/DRIER 1991 & ON – "O" RING TYPE	090016-5
13.	EXPANSION VALVE 1992 & ON – FWD. AND AFT EVAP. "O" RING TYPE	090002-"O"
14.	EXPANSION VALVE 1995 & ON – FWD. AND AFT EVAP. "O" RING TYPE NEW OR REPLACEMENT VALVE MAY INDICATE USE W/R-134a. ITEM IS COMPATIBLE WITH R-12 SYSTEM.	090002-"O"
15.	HIGH PRESSURE SAFETY SWITCH (ALL YEARS)	090004
16.	LOW PRESSURE SAFETY SWITCH 1991 & ON – NON-ADJUSTABLE (7 OUT/22 IN)	050107
17.	LOW PRESSURE SAFETY SWITCH 1991 & ON – (ALTERNATE) NON-ADJUSTABLE (6 OUT/34 IN)	090014

Pressure Switch Identification

For all

Air Conditioning kits

using R-134a

Low Pressure Switch: IFS P/N 050107

Leads are: BLUE in color

Mfg. P/N on switch: 20PS003MA022C007C

Opens: 7 PSI Closes: 22 PSI

IFS P/N: 050107

High Pressure Switch: IFS P/N 090004

Leads are: BLACK in color

Mfg. P/N on switch: 20PS002MB375K265K
Opens: 375 PSI Closes: 265 PSI

ALT. Mfg. P/N on switch: 20PS104MB350K250K
Opens: 350 PSI Closes: 250 PSI

IFS P/N: 090004 (Both Types)

REVISION RECORD				
DWG REV LTR	DATE:	DESCRIPTION OF CHANGE	APPVD BY	REV BY
A	05/13/91	MODIFIED AIR OUTLETS. TITLE BLOCK WAS CAS, IS IFS.	JHK	BRP
B	08/16/00	REVISED DRAWING NUMBER, WAS 1-AS355.	JHK	BRP
C	08/06/08	UPDATED WITH NEW TITLE BLOCK.		DWE

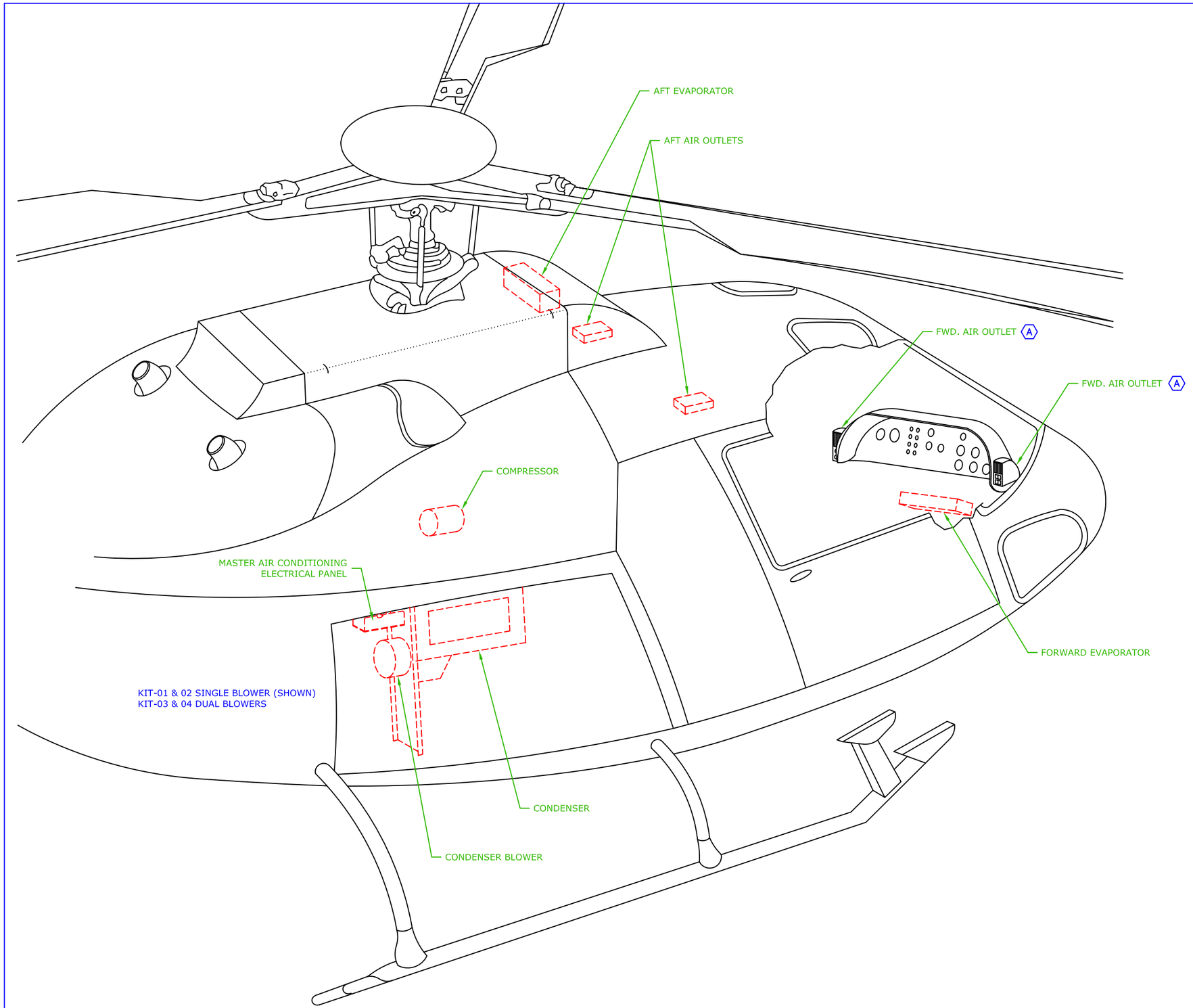

C

INTEGRATED Flight Systems

B

TITLE: AIR CONDITIONING OVERVIEW

DRAWN BY:	DATE:	REV	SCALE:	SHEET:
BRP	05/30/85	C	NONE	1 OF 1

APPLICATION:	DWG No.
AS355	1-1-AS355

REVISION RECORD				
DWG REV LTR	DATE:	DESCRIPTION OF CHANGE	APPVD BY	REV BY
A	08/16/00	REVISED DRAWING NUMBER, WAS 2-AS355; SHEET NUMBER WAS 1 OF 3. ADDED NEW NOTE 2. AND NEW NOTE 3.	JHK	MAH
B	08/06/08	UPDATED WITH NEW TITLE BLOCK.		DWE

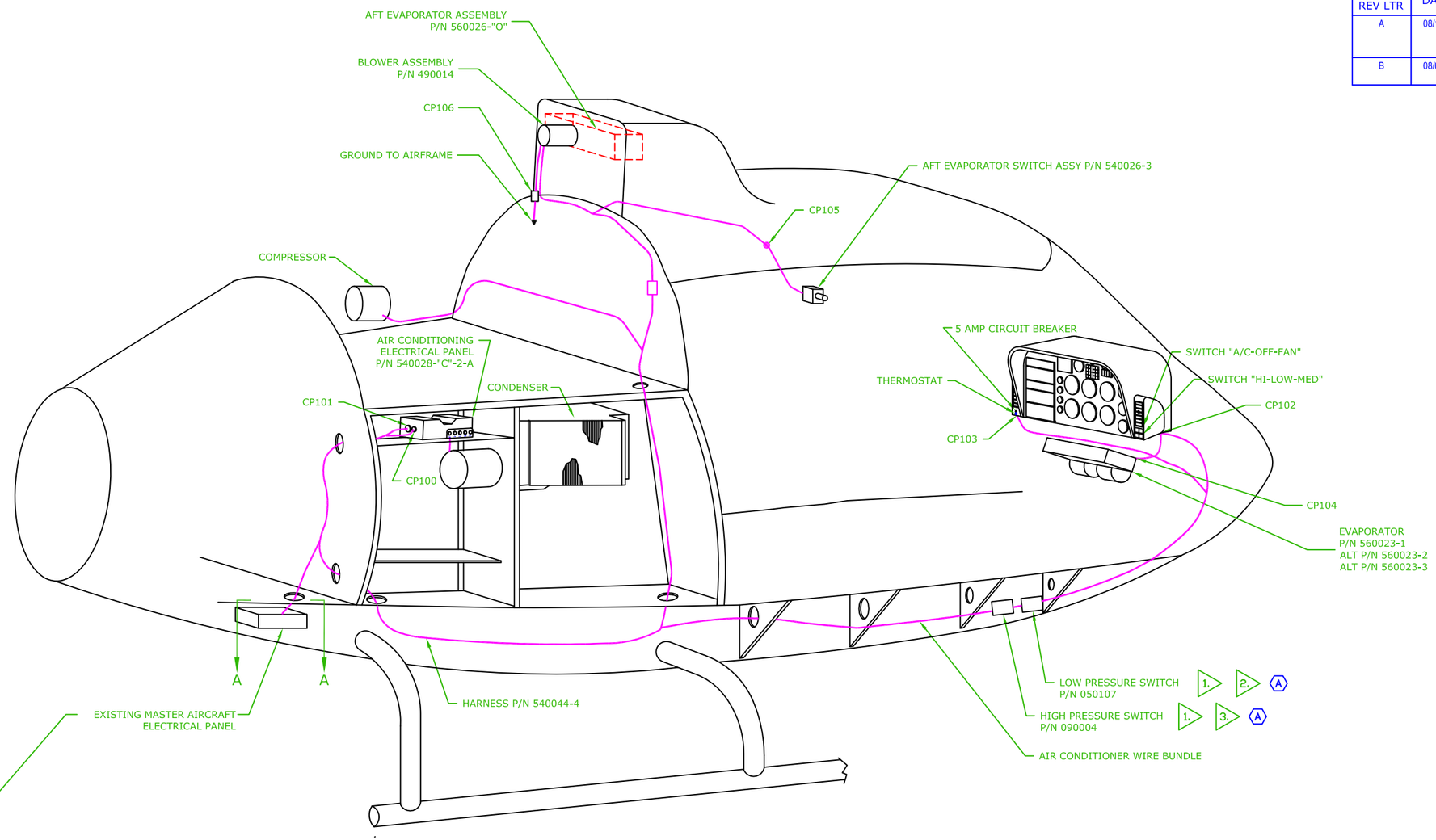

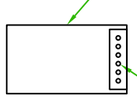

VIEW A-A

USE EXISTING 40 AMP CIRCUIT BREAKER OR FUSE AT PRIMARY BUSS WITH (SINGLE CONDENSER BLOWER) BY DYNAMIC AIR ENGINEERING.

USE 50 AMP CIRCUIT BREAKER OR FUSE AT PRIMARY BUSS WHEN (SINGLE CONDENSER BLOWER) BY ENVIRO SYSTEMS, INC. OR AIR MOVERS, LLC. IS UTILIZED.

NOTE:

USE EXISTING LIGHTENING HOLES ONLY FOR ALL ROUTING OR SECURE WIRES TO EXISITNG BUNDLES OR REFRIGERATION HOSE USING TY-WRAPS, STAND-OFFS, AND SPACER BLOCKS AS REQUIRED.

1. LOCATION OF PRESSURE SWITCHES WHEN R-134a IS UTILIZED.

A 2. INSTALL IFS104C14 TO LOW PRESSURE SWITCH. (BLUE LEADS)

A 3. INSTALL IFS108B20 AND IFS108D20 TO HIGH PRESSURE SWITCH. (BLACK LEADS)

AS 355
ELECTRICAL WIRING DIAGRAM

SINGLE CONDENSER BLOWER

SINGLE CONDENSER BLOWER

B

INTEGRATED Flight Systems

A

TITLE: ELECTRICAL ROUTING

DRAWN BY:	DATE:	REV	SCALE:	SHEET:
MAH	11/10/96	B	NONE	1 OF 1

APPLICATION:	DWG No.
AS355	2-1-AS355

REVISION RECORD

DWG REV LTR	DATE:	DESCRIPTION OF CHANGE	APPVD BY	REV BY
A	08/16/00	WAS 15 AMP BREAKER, IS 20 AMP; RELOCATED LOW PRESSURE SWITCH. REVISED DRAWING NUMBER, WAS 2-AS355; SHEET NUMBER WAS 3 OF 3. NOTE 1 WAS CHANGED FROM SH. 1 OF 3 TO DWG 2-11-AS355.	JHK	MAH
B	08/06/08	UPDATED WITH NEW TITLE BLOCK.		DWE

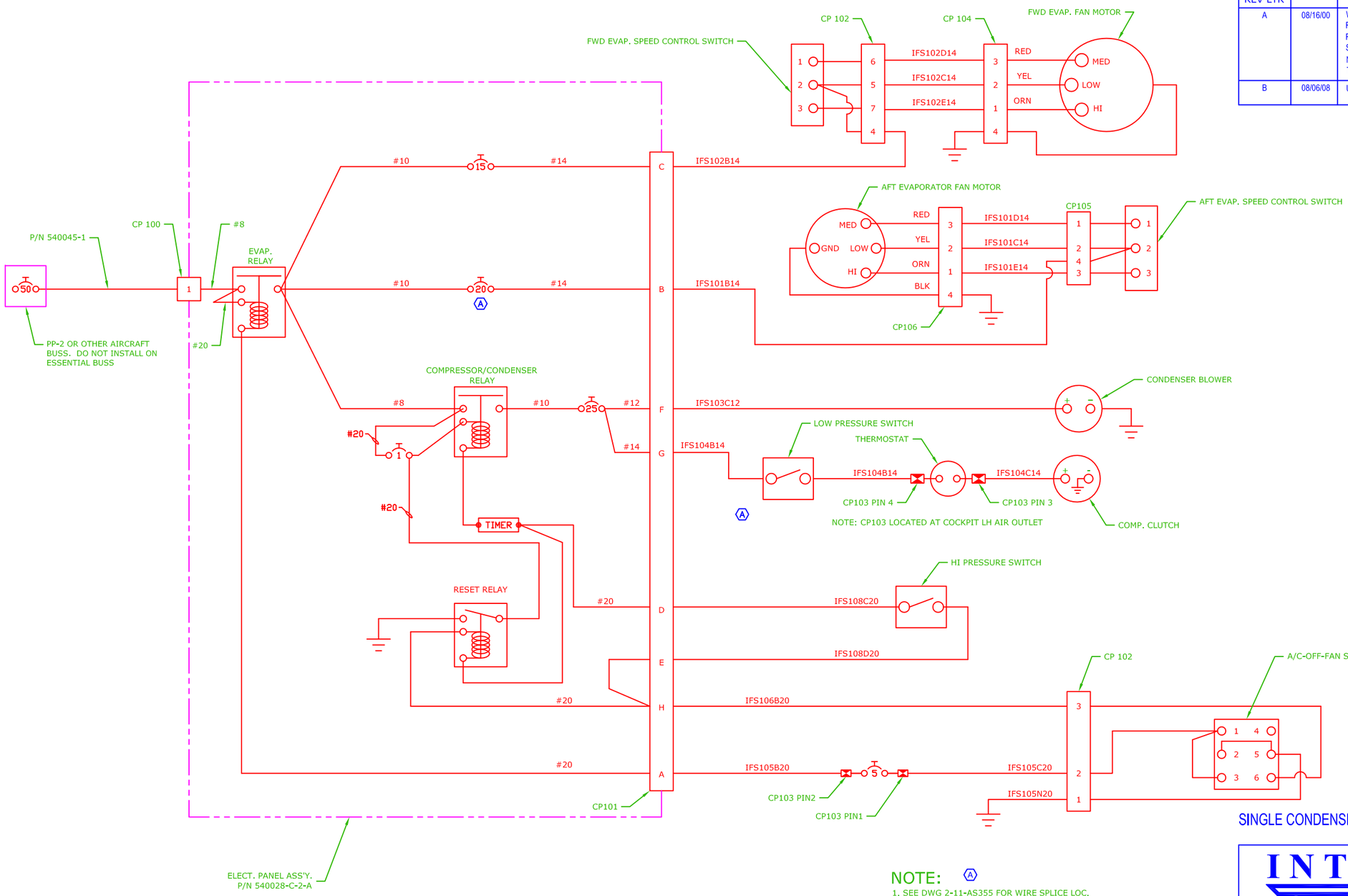

SINGLE CONDENSER BLOWER

AS 355
ELECTRICAL WIRING DIAGRAM

SINGLE CONDENSER BLOWER

NOTE:
1. SEE DWG 2-11-AS355 FOR WIRE SPLICE LOC.
2. WIRE SPEC: MIL-W-22759/16
WIRE NO. IFS XXX X XX
GROUP
SEQUENCE (N INDICATES GROUND)
GAUGE

INTEGRATED Flight Systems

TITLE: ELECTRICAL DIAGRAM

DRAWN BY:	DATE:	REV	SCALE:	SHEET:
MAH	11/10/96	B	NONE	1 OF 1

APPLICATION: AS355
DWG No. 2-21-AS355

REVISION RECORD

DWG REV LTR	DATE:	DESCRIPTION OF CHANGE	APPVD BY	REV BY
A	08/16/00	REVISED DRAWING NUMBER, WAS 3-AS355. SHEET NUMBER WAS 1 OF 2. ADDED NOTE ON VIEW C-C.		N. DEAN
B	08/06/08	UPDATED WITH NEW TITLE BLOCK.		DWE

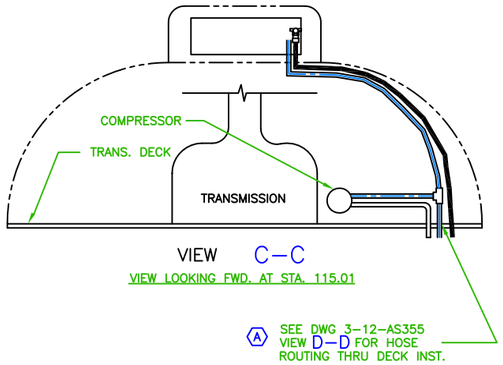

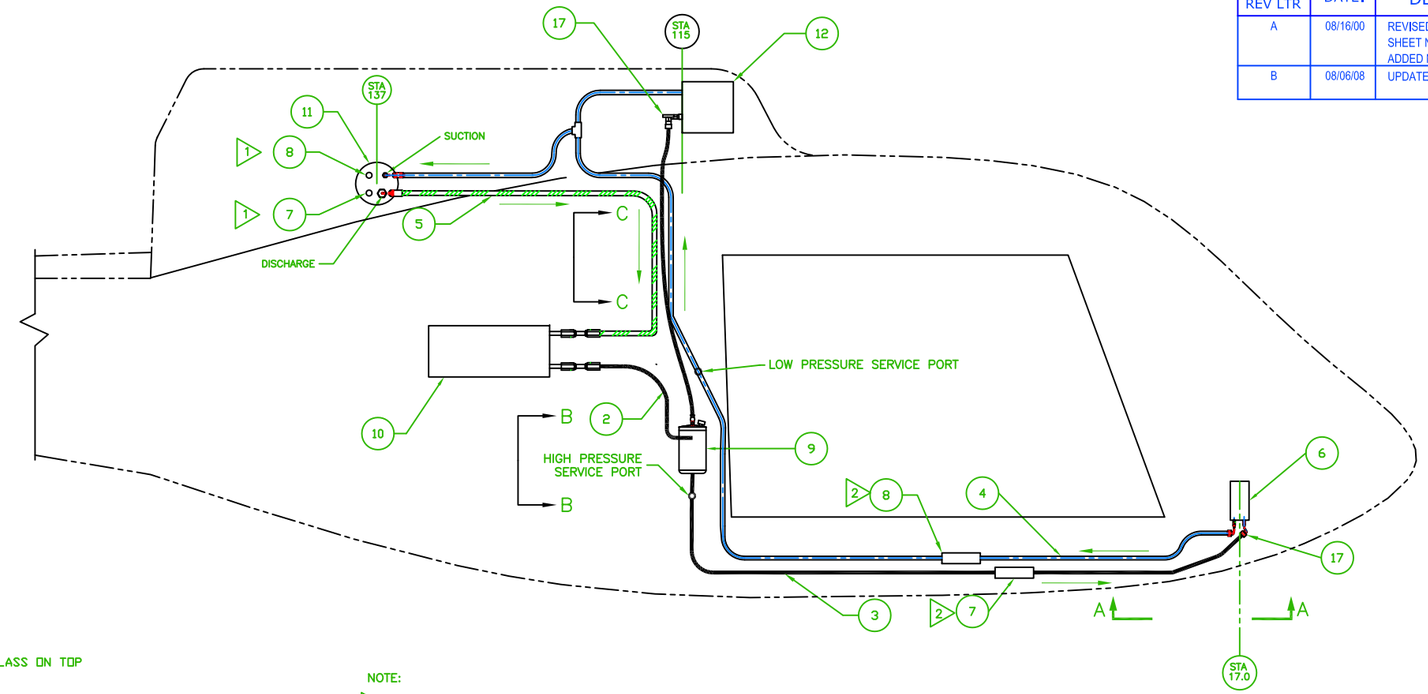

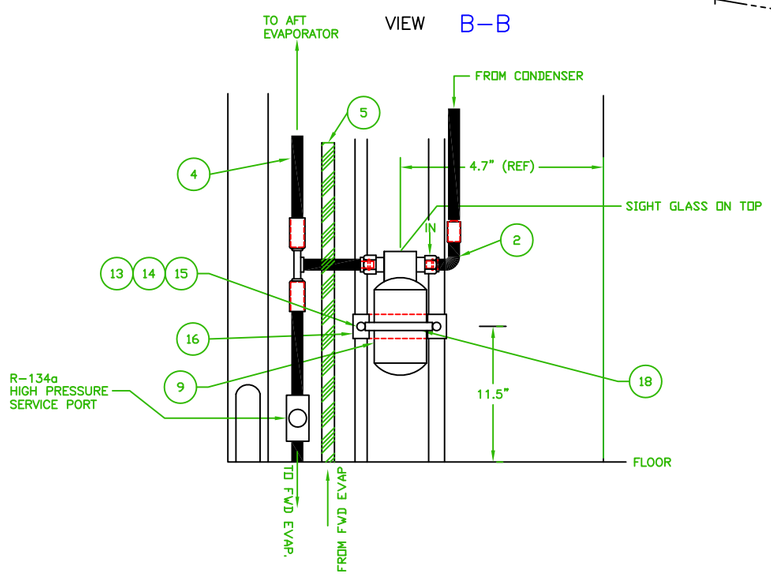

NOTE:

1. LOCATION OF PRESSURE SWITCHES WHEN R–12 COMPRESSOR IS INSTALLED
2. LOCATION OF PRESSURE SWITCHES WHEN R–134a COMPRESSOR IS INSTALLED
3. COMPRESSORS
   - P/N 010001–1 R–12 FLARE
   - P/N 010001–1–"O" R–12 "O" RING
   - P/N 010001–2–"O" R134a W/ESTER OIL
   - P/N 010001–3–"O" R134a W/SP–20 OIL

QTY	ITEM	PART NUMBER	DESCRIPTION
1	18	060036	3 INCH BAND CLAMP
2	17	090002-O	EXPANSION VALVE
1	16	260123-1	RECEIVER DRIER MOUNT
2	15	MS21044-N3	NUT
4	14	AN960-10	WASHERS
2	13	AN3-4A	BOLT
1	12	560024-O	AFT EVAPORATOR
1	11	010001-1	COMPRESSOR 24 VDC 3
1	10	550007-1	CONDENSER (ALT: 550007-2 FOR DUAL BLOWERS)
1	9	090016-5	RECEIVER DRIER BOTTLE
1	8	050107	LOW PRESSURE SWITCH
1	7	090004	HIGH PRESSURE SWITCH
1	6	560023-1	FORWARD EVAPORATOR (ALT: 560023, 530023-3)
1	5	570049-O-A	HOSE ASSY COMPRESSOR TO CONDENSER
1	4	570073-O-A	HOSE ASSY. AFT EVAP TO FWD. TO AFT COMPRESSOR
1	3	570069-O-A	HOSE ASSY. AFT EVAP TO FWD. EVAP TO REC/DRIER
1	2	570020-O-A	HOSE ASSY. COND. TO REC./DRIER
-	1	RESERVED	-

NOTE:

ALTERNATE HOSE:
1991–ON NEOPRENE BARRIER TYPE

#6 P/N 090078	BASIC	#6 P/N 090089
#8 P/N 090079	PRODUCT	#8 P/N 090090
#10 P/N 090080	IFS P/N	#10 P/N 090091

1995–ON NEOPRENE REDUCED BARRIER TYPE

MUST USE ATCO REDUCED BARRIER TYPE FITTINGS & ATCO CRIMPER P/N 3700

FERRULES FOR ABOVE

#6 P/N 090081	BASIC
#8 P/N 090082	PRODUCT
#10 P/N 090083	IFS P/N

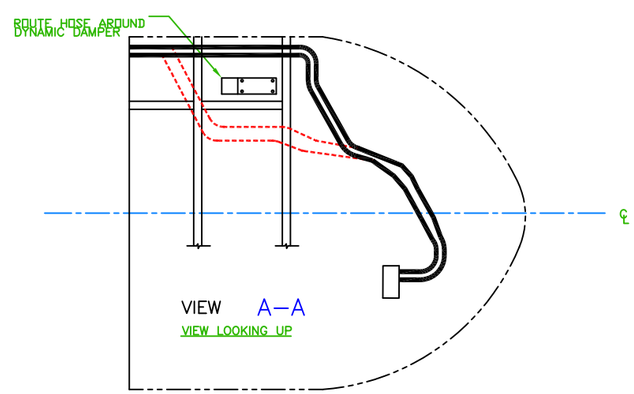

A B

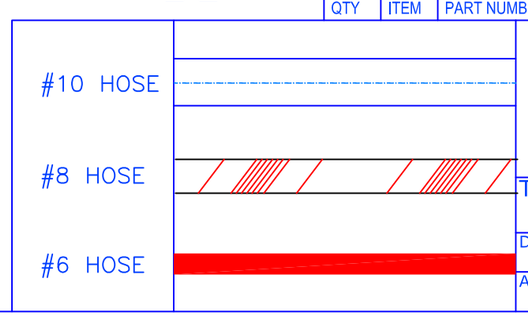

INTEGRATED Flight Systems

TITLE: PLUMBING DIAGRAM

DRAWN BY:	DATE:	REV	SCALE:	SHEET:
N. DEAN	11/10/96	B	NONE	1 OF 1

APPLICATION: AS 355

DWG No. 3-2-AS355

REVISION RECORD				
DWG REV LTR	DATE:	DESCRIPTION OF CHANGE	APPVD BY	REV BY
A	08/16/00	REVISED DRAWING NUMBER, WAS 3-AS355. SHEET NUMBER WAS 2 OF 2.	JHK	MAH
B	08/06/08	UPDATED WITH NEW TITLE BLOCK.		DWE

NOTES:

1. FOR #6 HOSE ATTACH WITH ADEL CLAMP MS21919DG10 & HARDWARE AS SHOWN
2. FOR #8 HOSE ATTACH WITH ADEL CLAMP MS21919DG11 & HARDWARE AS SHOWN
3. FOR #10 HOSE ATTACH WITH ADEL CLAMP MS21919DG12 & HARDWARE AS SHOWN
4. INSTALL PER VIEW B-B, ALTERNATE VIEW B-B, OR VIEW C-C.

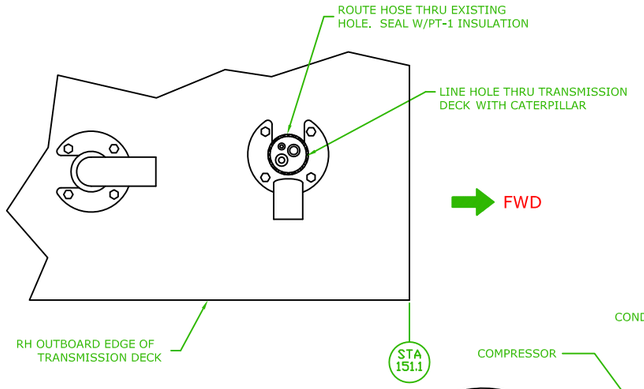

VIEW D-D

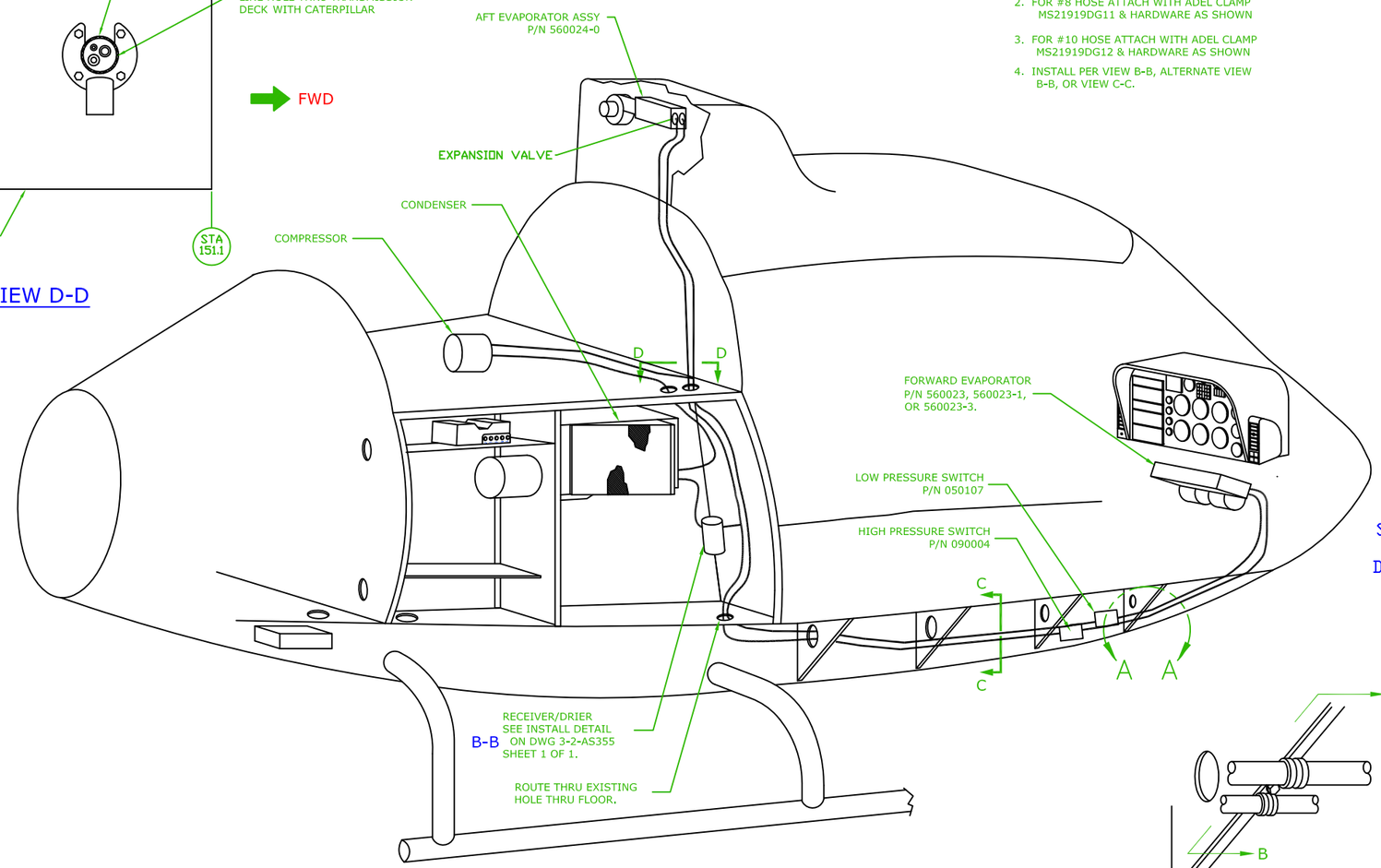

EXTREMELY IMPORTANT

FAILURE TO SECURE EXPANSION VALVE SENSING BULB, TIGHTLY, TO THE RETURN LINE (VERTICAL COPPER TUBE) WITH A STAINLESS STEEL CLAMP (AND INSULATE SENSING BULB AND LINE) WILL DRAMATICALLY DECREASE THE PERFORMANCE OF THE FORWARD (NOT AFT) EVAPORATOR.

NOTE: USE EXISTING LIGHTENING HOLES ONLY, FOR ALL ROUTING (PREFERRED METHOD).

INSTALL PER VIEW B-B OR ALTERNATE VIEW B-B OR VIEW C-C.

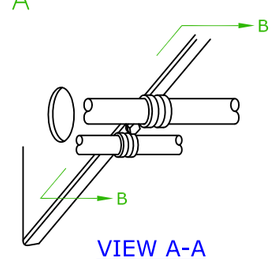

VIEW A-A
SEE NOTES

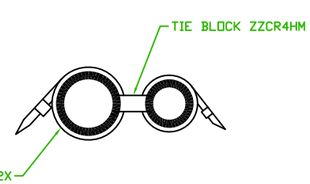

VIEW C-C
SEE NOTES

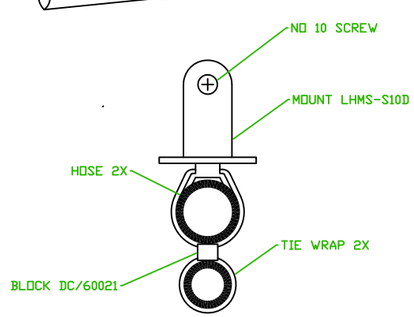

VIEW B-B
"ALTERNATE"
SEE NOTES

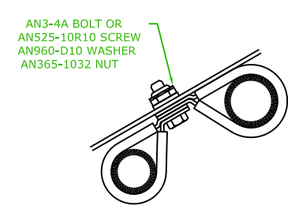

VIEW B-B
SEE NOTES
ALTERNATE: SEE VIEW B-B ALTERNATE

B

INTEGRATED Flight Systems

TITLE: PLUMBING ROUTING

DRAWN BY:	DATE:	REV	SCALE:	SHEET:
MAH	11/10/96	B	NONE	1 OF 1
APPLICATION: AS 355			DWG No. 3-12-AS355	

A

REVISION RECORD

DWG REV LTR	DATE:	DESCRIPTION OF CHANGE	APPV'D BY	REV BY
A	05/13/91	DELETE NOTES, DRAIN LEG AND DRAIN TEE. ADD NOTE: SEAL P/N 040013 DEL. CLIP NUT, CIRC. HOLES WERE RECT. 490013 WAS 040013, TITLE BLOCK WAS CAS, IS IFS. ADDED NOTES TO EXP. VALVE.	JHK	B.R.P.
B	6/28/00	ADDED ALTER COIL ASSY, P/N 510018-"0"-1. REVISED DRAWING NUMBER, WAS 8-AS355. SHEET NUMBER WAS 2 OF 2.	JHK	B.R.P.
C	08/06/08	CONVERTED DRAWING TO AUTOCAD. UPDATED WITH NEW TITLE BLOCK.		DWE

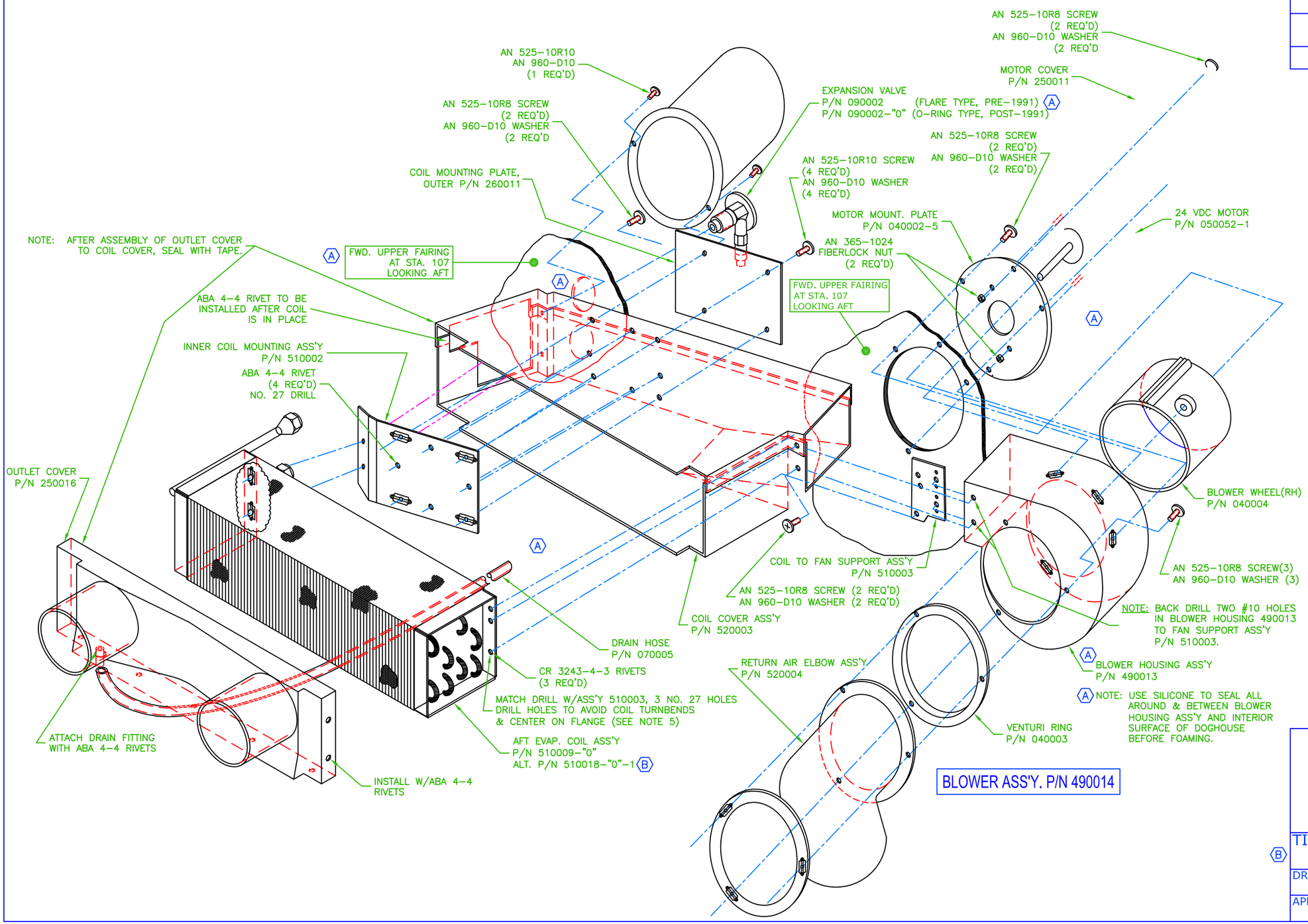

C

INTEGRATED Flight Systems

B

TITLE: AFT EVAPORATOR INSTALL

DRAWN BY:	DATE:	REV	SCALE:	SHEET:
B.R.P.	05/30/85	C	NONE	1 OF 1

APPLICATION:	DWG No.
AS 355	4-1-AS355

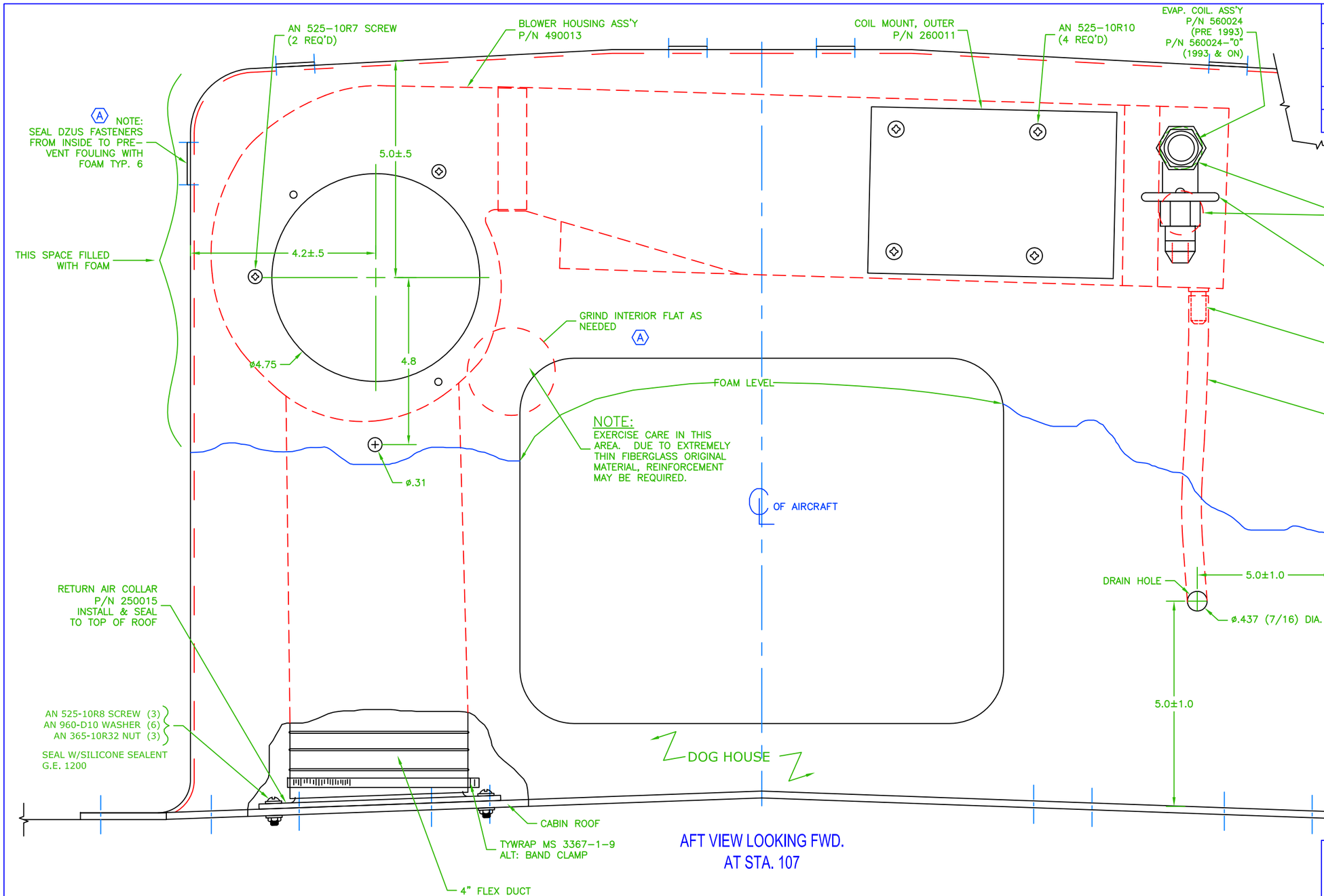

AFT VIEW LOOKING FWD.
AT STA. 107

NOTE: ALL TOLERANCES ±.1 UNLESS
OTHERWISE SPECIFIED.

B

REVISION RECORD

DWG REV LTR	DATE:	DESCRIPTION OF CHANGE	APPV'D BY	REV BY
A	05/13/91	ADDED NOTES (TYP.3), DELETED DRAIN LEG. TITLE BLOCK WAS CAS, IS IFS. WAS 560024, IS 560024 "0".	JHK	B.P.
B	08/16/00	REVISED DRAWING NUMBER, WAS 4-AS355. SHEET NUMBER WAS 2 OF 4.	JHK	B.P.
C	08/06/08	CONVERTED DRAWING TO AUTOCAD. UPDATED WITH NEW TITLE BLOCK.		DWE

INTEGRATED Flight Systems

TITLE: AFT EVAPORATOR INSTALL

DRAWN BY:	DATE:	REV	SCALE:	SHEET:
B.R.P.	05/30/85	C	NONE	1 OF 1

APPLICATION:	DWG No.
AS 355	4-2-AS355

REVISION RECORD				
DWG REV LTR	DATE:	DESCRIPTION OF CHANGE	APPV'D BY	REV BY
A	05/13/91	ADD BRKT. NOTE & DRAIN NOTE, DELETED DRAIN LEG, TEE & GROMMETS. TITLE BLOCK WAS CAS, IS IFS. WAS 560024, IS 560024 "0".	JHK	B.P.
B	08/16/00	REVISED DRAWING NUMBER. WAS 4-AS355. SHEET NUMBER WAS 3 OF 4.	JHK	B.P.
C	08/06/08	CONVERTED DRAWING TO AUTOCAD. UPDATED WITH NEW TITLE BLOCK.		DWE

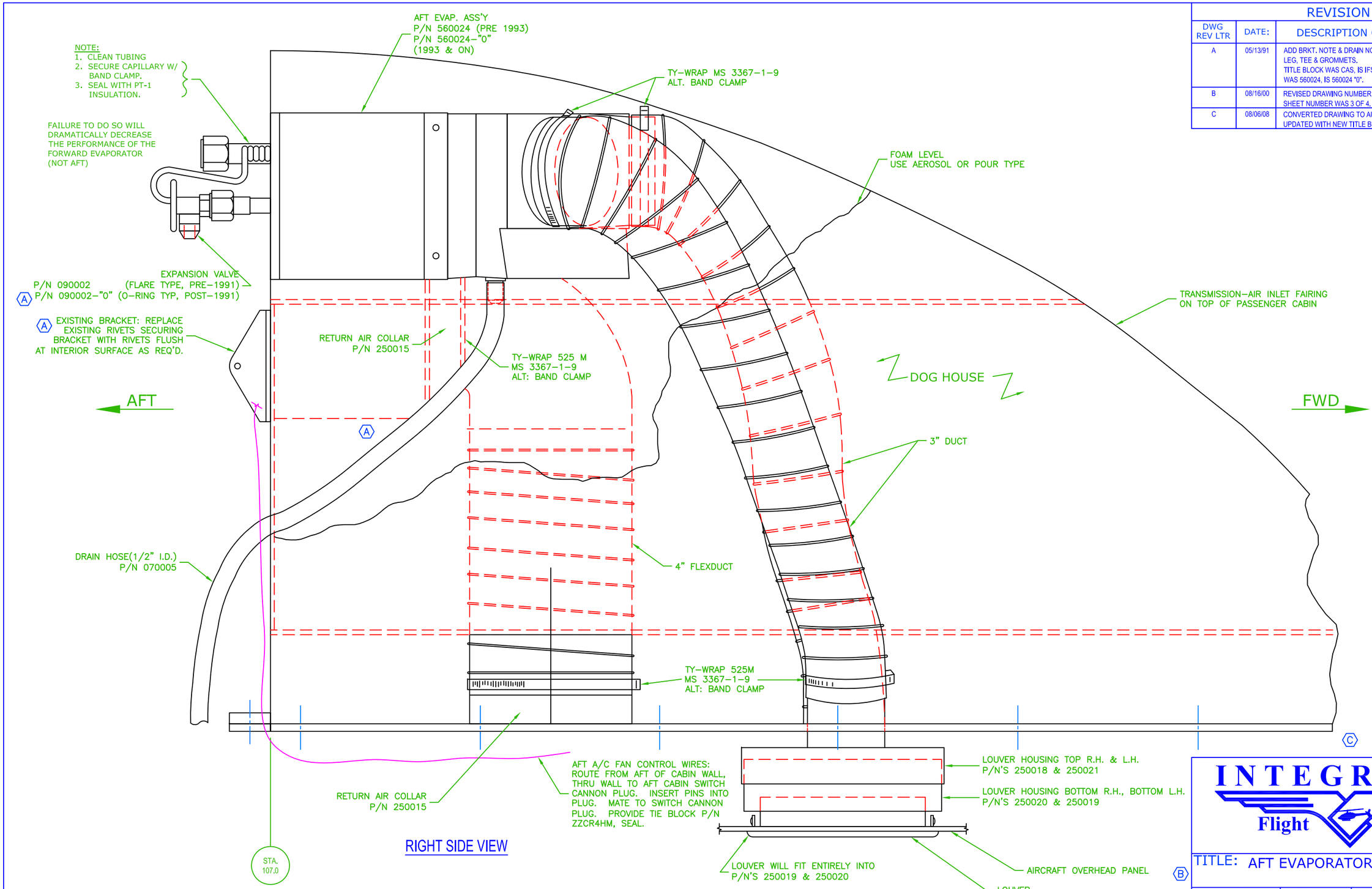

INTEGRATED Flight Systems

TITLE: AFT EVAPORATOR INSTALL

DRAWN BY:	DATE:	REV	SCALE:	SHEET:
B.R.P.	05/30/85	C	NONE	1 OF 1

APPLICATION:	DWG No.
AS 355	4-3-AS355

REVISION RECORD				
DWG REV LTR	DATE:	DESCRIPTION OF CHANGE	APPV'D BY	REV BY
A	05/13/91	CHANGED ORIENTATION OF TEE ADDED NOTE & DETAIL "B" TITLE BLOCK WAS CAS, IS IFS.	JHK	B.P.
B	08/16/00	REVISED DRAWING NUMBER, WAS 4-AS355. SHEET NUMBER WAS 4 OF 4.	JHK	B.P.
C	08/06/08	CONVERTED DRAWING TO AUTOCAD. UPDATED WITH NEW TITLE BLOCK. ADDED NOTE TO RELOCATE AVIONICS FAN IF REQUIRED.		DWE

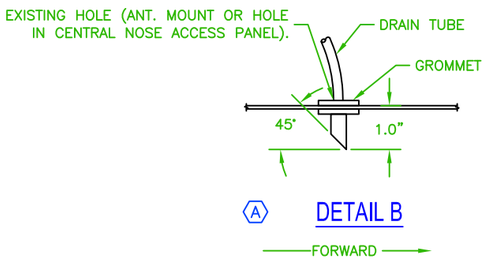

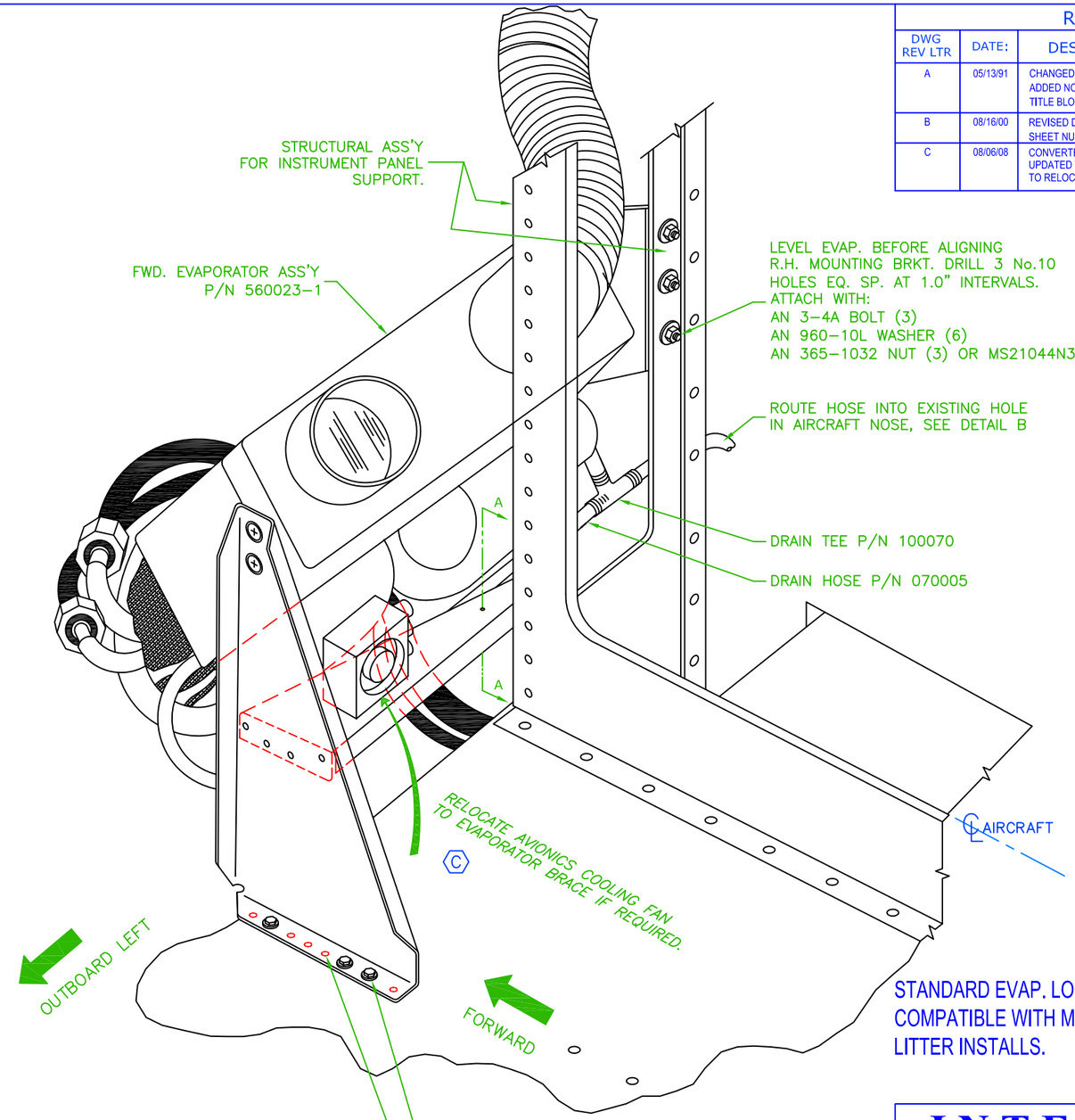

EXTREMELY IMPORTANT!

FAILURE TO SECURE EXPANSION VALVE SENSING BULB, TIGHTLY, TO THE RETURN LINE HOSE FITTING (#10) WITH A STAINLESS STEEL CLAMP (AND INSULATE SENSING BULB & LINE) WILL DRAMATICALLY DECREASE THE PERFORMANCE OF THE AFT EVAPORATOR (NOT FORWARD).

STANDARD EVAP. LOCATION. COMPATIBLE WITH MOST LITTER INSTALLS.

C

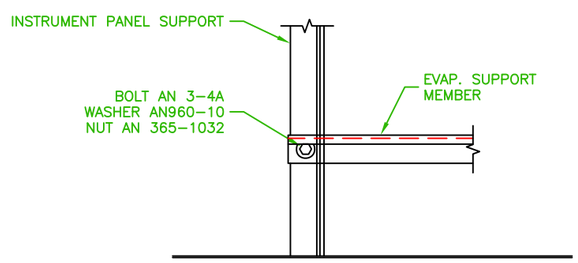

VIEW A-A
LOOKING AFT

B

INTEGRATED Flight Systems

TITLE: FORWARD EVAPORATOR INSTALL				
DRAWN BY: B.P.	DATE: 05/30/85	REV C	SCALE: NONE	SHEET: 1 OF 1
APPLICATION: AS 355			DWG No. 4-4-AS355	

REVISION RECORD				
DWG REV LTR	DATE:	DESCRIPTION OF CHANGE	APPV'D BY	REV BY
A	08/16/00	REVISED DRAWING NUMBER. WAS 4-AS355. SHEET NUMBER WAS 4 OF 4.	JHK	K.M.L.
B	08/06/08	CONVERTED DRAWING TO AUTOCAD. UPDATED WITH NEW TITLE BLOCK.		DWE

EXTREMELY IMPORTANT!

FAILURE TO SECURE EXPANSION VALVE SENSING BULB, TIGHTLY, TO THE RETURN LINE HOSE FITTING (#10) WITH A STAINLESS STEEL CLAMP (AND INSULATE SENSING BULB & LINE) WILL DRAMATICALLY DECREASE THE PERFORMANCE OF THE AFT EVAPORATOR (NOT FORWARD).

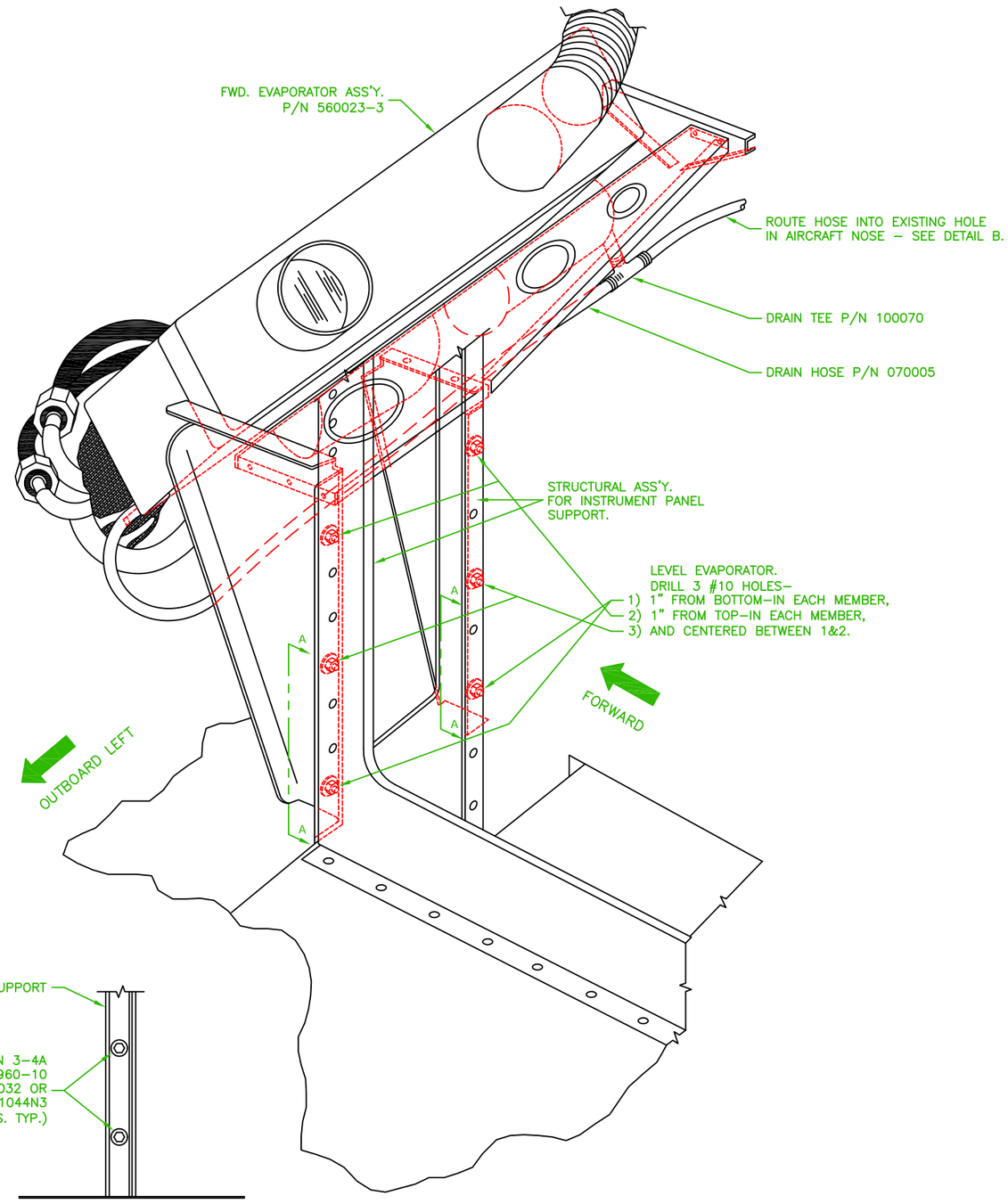

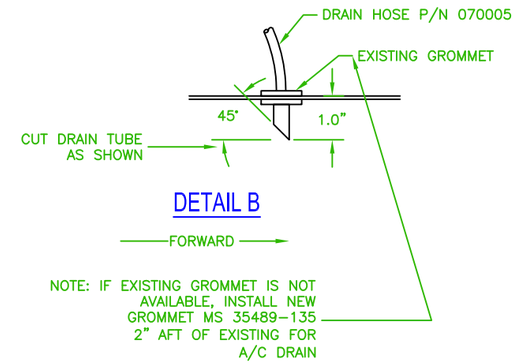

DETAIL B

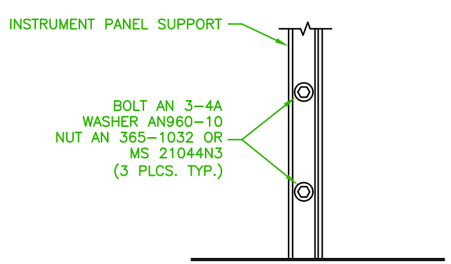

VIEW A-A
LOOKING AFT

EMS EVAP. LOCATION
TO AVOID LITTER

B

INTEGRATED Flight Systems

A

TITLE: FORWARD EVAPORATOR INSTALL				
DRAWN BY: K.M.L.	DATE: 08/05/94	REV B	SCALE: NONE	SHEET: 1 OF 1
APPLICATION: AS 355			DWG No. 4-14-AS355	

REVISION RECORD				
DWG REV LTR	DATE:	DESCRIPTION OF CHANGE	APPV'D BY	REV BY
A	05/13/91	ADDED CP102 & CP103. TITLE BLOCK WAS CAS, IS IFS. ADDED 500008-1 & 500009-1.	JHK	BRP
B	08/16/00	REVISED DRAWING NUMBER, WAS 5-AS355. SHEET NUMBER WAS 1 OF 2.	JHK	BRP
C	08/06/08	CONVERTED DRAWING TO AUTOCAD. UPDATED WITH NEW TITLE BLOCK REMOVED. REMOVED THERMOSTAT.		DWE

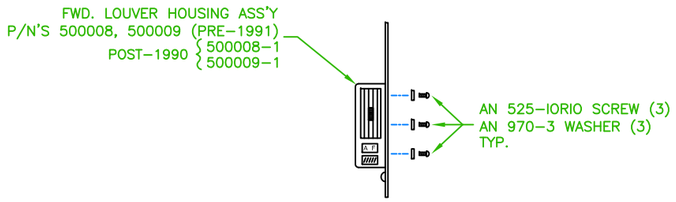

LOUVER ASS'Y MOUNTING

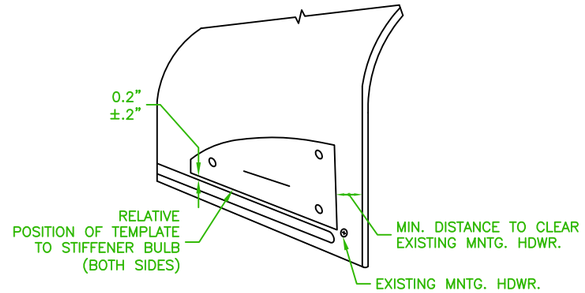

LOUVER ASS'Y POSITION

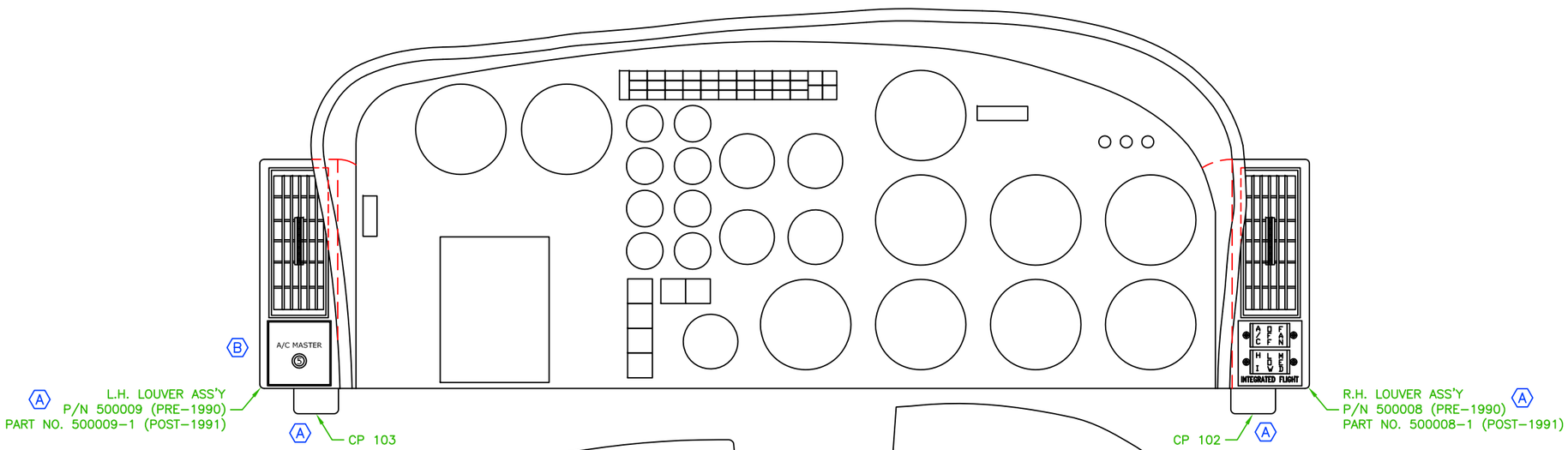

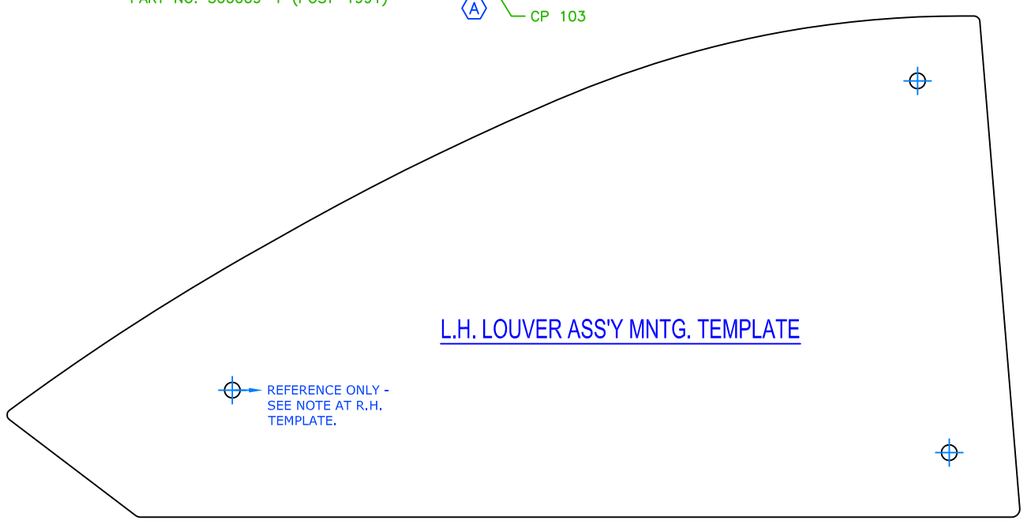

L.H. LOUVER ASS'Y MNTG. TEMPLATE

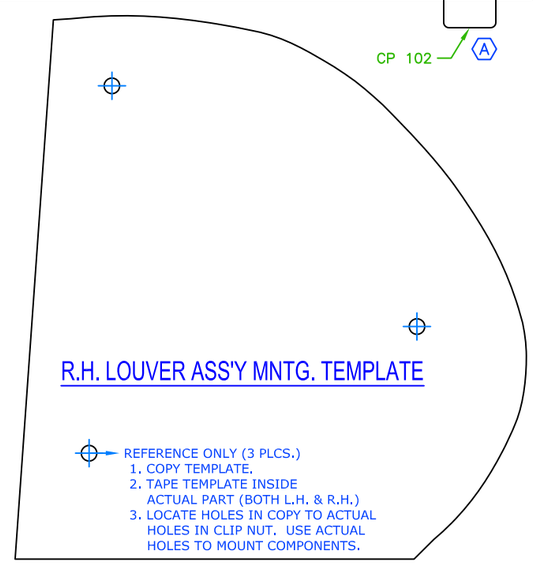

R.H. LOUVER ASS'Y MNTG. TEMPLATE

C

A

INTEGRATED Flight Systems

TITLE: AIR DISTRIBUTION

DRAWN BY:	DATE:	REV	SCALE:	SHEET:
BRP	05/30/85	C	NONE	1 OF 1

B

APPLICATION:	DWG No.
AS355	5-1-AS355

REVISION RECORD				
DWG REV LTR	DATE:	DESCRIPTION OF CHANGE	APPV'D BY	REV BY
A	08/16/00	REVISED DRAWING NUMBER. WAS 5-AS355. SHEET NUMBER WAS 1 OF 2.	JHK	BRP
B	08/06/08	CONVERTED DRAWING TO AUTOCAD. REVISED OLD P/N'S 50008-1 & 50009-1 TO NEW P/N'S 500008-1 & 500009-1.		DWE

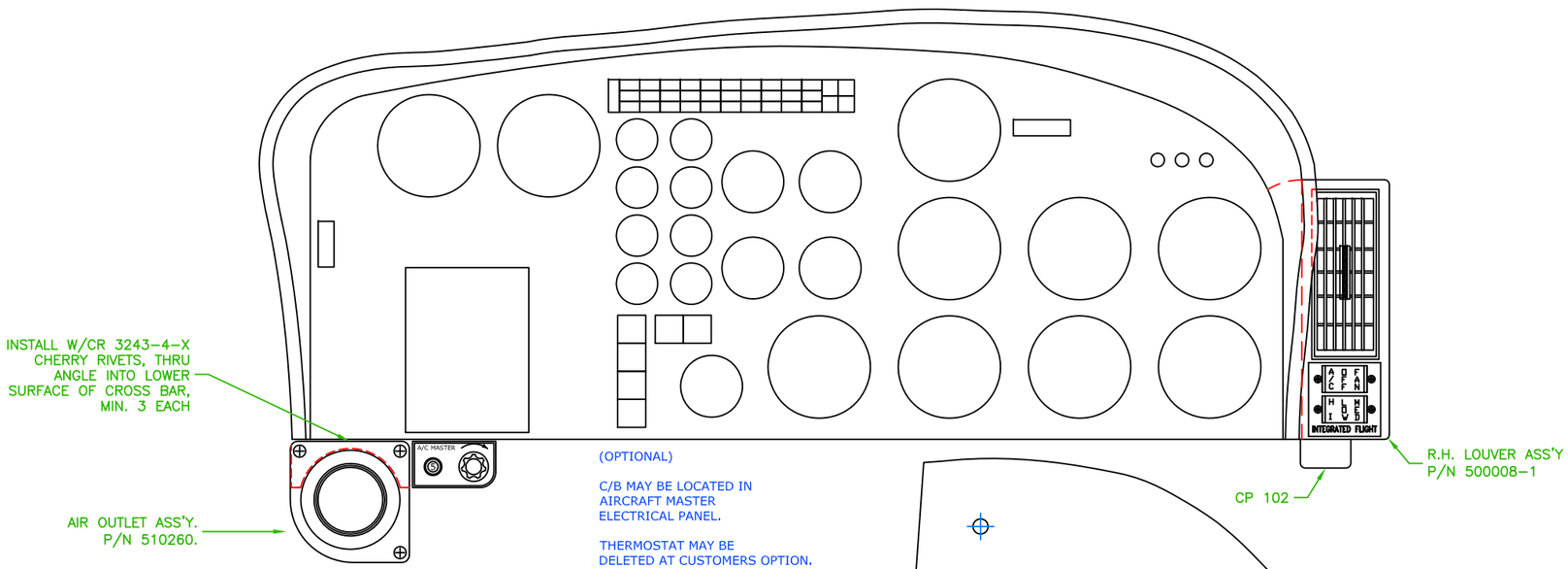

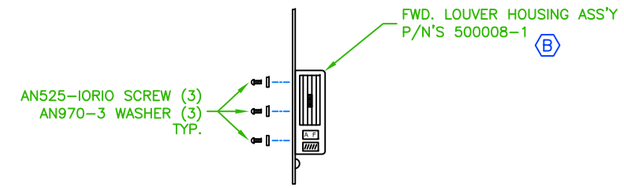

LOUVER ASS'Y MOUNTING

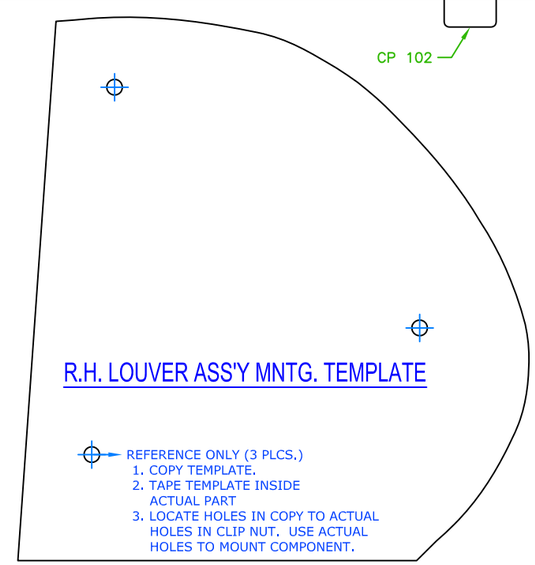

R.H. LOUVER ASS'Y MNTG. TEMPLATE

REFERENCE ONLY (3 PLCS.)
1. COPY TEMPLATE.
2. TAPE TEMPLATE INSIDE ACTUAL PART
3. LOCATE HOLES IN COPY TO ACTUAL HOLES IN CLIP NUT. USE ACTUAL HOLES TO MOUNT COMPONENT.

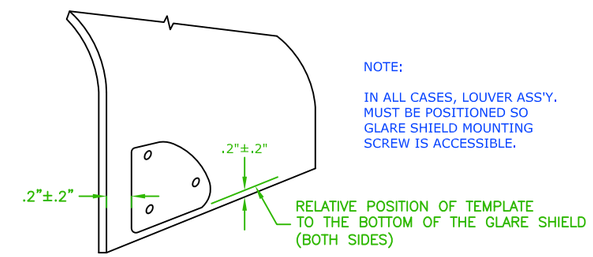

NOTE:

IN ALL CASES, LOUVER ASS'Y. MUST BE POSITIONED SO GLARE SHIELD MOUNTING SCREW IS ACCESSIBLE.

ALTERNATE: L.H. AIR OUTLET
LAW ENFORCEMENT
OR
UTILIZED WITH: EMS WIDE LITTER

B

INTEGRATED Flight Systems

A

TITLE: AIR DISTRIBUTION				
DRAWN BY: K.M.L.	DATE: 06/10/94	REV B	SCALE: NONE	SHEET: 1 OF 1
APPLICATION: AS 355			DWG No. 5-2-AS355	

REVISION RECORD				
DWG REV LTR	DATE:	DESCRIPTION OF CHANGE	APPVD BY	REV BY
A	05/13/91	AN 525 SCREW WAS MS 27039-2 REVERSED HEAD. SWITCH P/N 540026 WAS P/N 050001. TITLE BLOCK WAS CAS, IS IFS. ADDED CANNON PLUG. INTEGRATED FLIGHT WAS CONSOLIDATE AIRE.	JHK	BRP
B	08/16/00	REVISED DRAWING NUMBER, WAS 5-AS355. SHEET NUMBER WAS 2 OF 2.	JHK	BRP
C	08/06/08	CONVERTED DRAWING TO AUTOCAD. UPDATED WITH NEW TITLE BLOCK. ADDED ALT. P/N 540026 FOR P/N 540026-3 SWITCH ASSEMBLY.		DWE

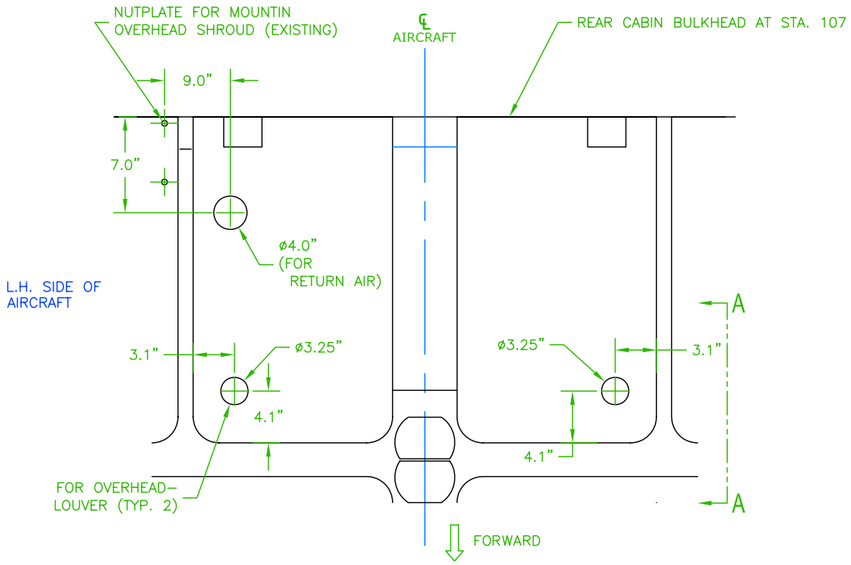

VIEW LOOKING UP

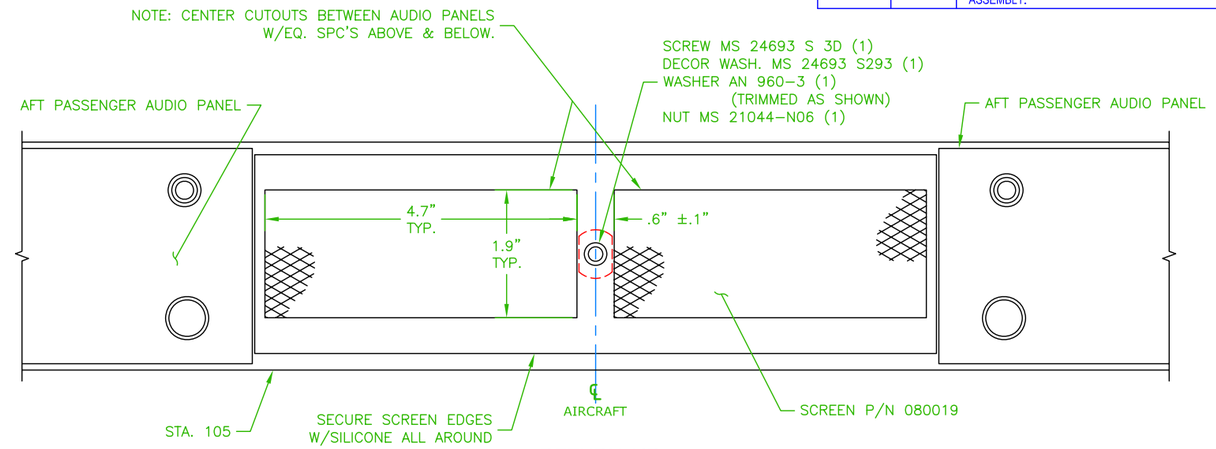

RETURN AIR

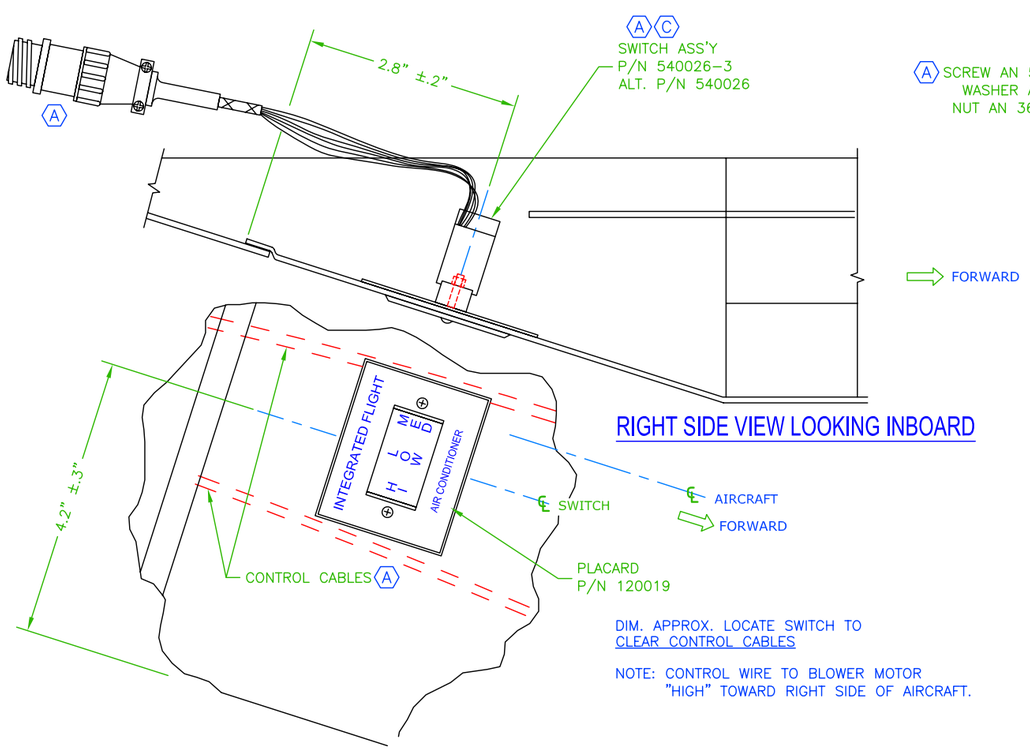

RIGHT SIDE VIEW LOOKING INBOARD

DIM. APPROX. LOCATE SWITCH TO
CLEAR CONTROL CABLES

NOTE: CONTROL WIRE TO BLOWER MOTOR
"HIGH" TOWARD RIGHT SIDE OF AIRCRAFT.

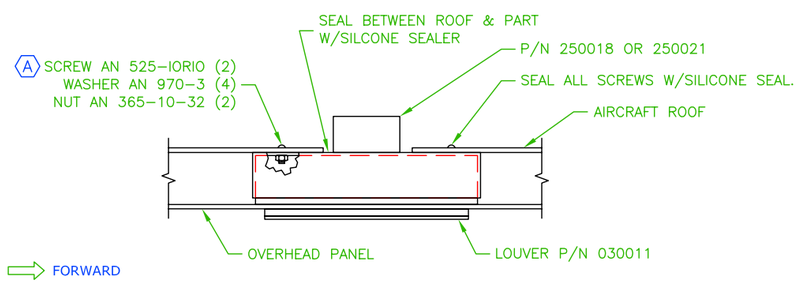

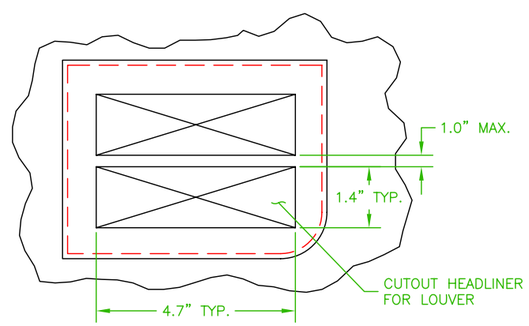

VIEW A-A
(TYP.2) ROT. 90° CLOCKWISE

C

A

INTEGRATED Flight Systems

TITLE: AIR DISTRIBUTION

DRAWN BY:	DATE:	REV	SCALE:	SHEET:
BP	05/30/85	C	NONE	1 OF 1

B

APPLICATION:	DWG No.
AS355	5-11-AS355

REVISION RECORD				
DWG REV LTR	DATE:	DESCRIPTION OF CHANGE	APPV'D BY	REV BY
A	05/13/91	TITLE BLOCK WAS CAS, IS IFS. ADDED HI & LO PRESSURE SWITCHES TO COMPRESSOR. ADDED SIDE VIEW OF COMPRESSOR. ADDED P/N 530036.	JHK	BRP
B	08/16/00	REVISED DRAWING NUMBER, WAS 6-AS355.	JHK	BRP
C	08/06/08	CONVERTED DRAWING TO AUTOCAD. UPDATED WITH NEW TITLE BLOCK.		DWE

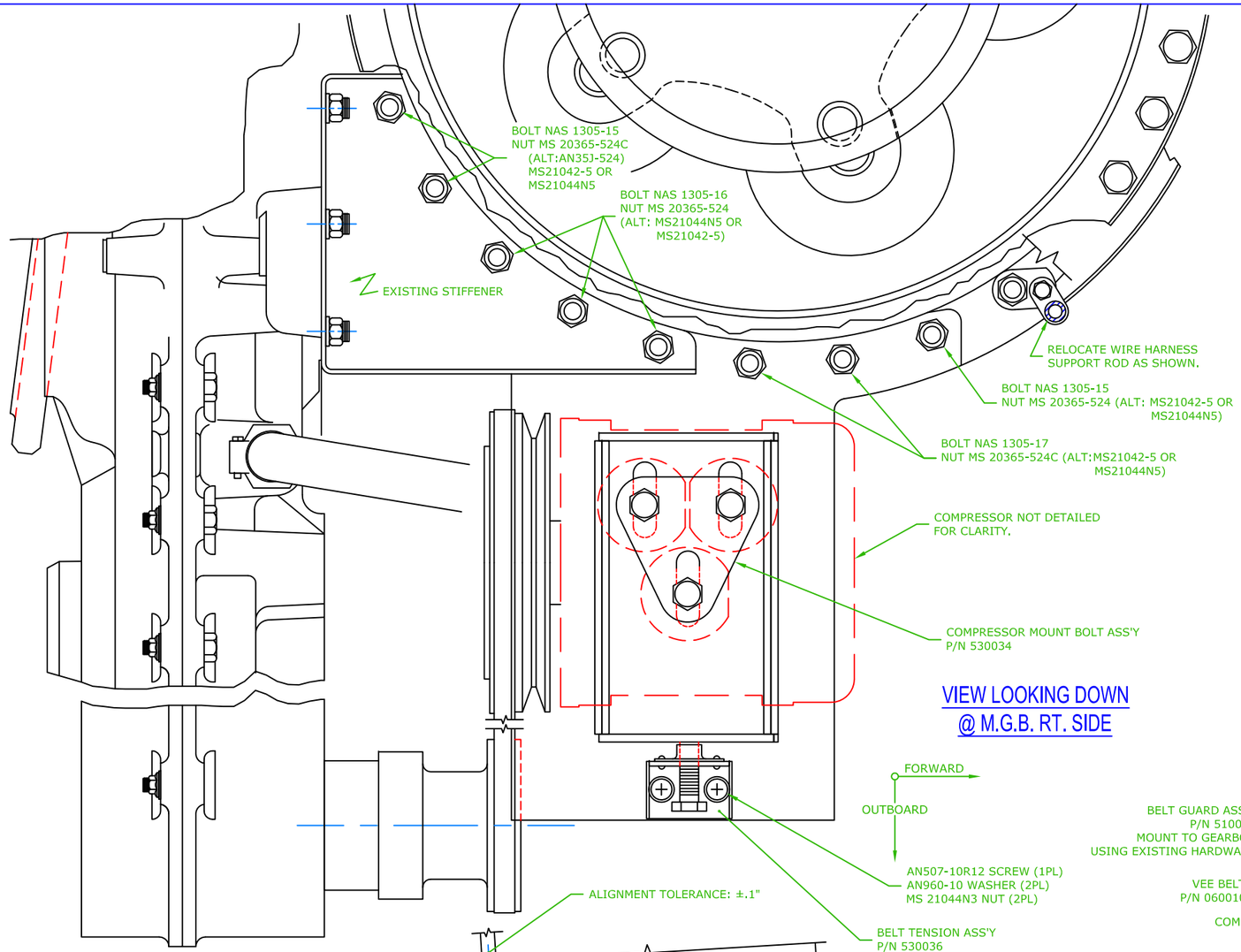

VIEW LOOKING DOWN
@ M.G.B. RT. SIDE

FORWARD

INSTALLATION INSTRUCTIONS

1. TEMPORARILY INSTALL COMPRESSOR BRACKET ASSEMBLY.
2. TEMPORARILY MOUNT COMPRESSOR TO COMPRESSOR SHOE ASSEMBLY.
3. DO NOT INCLUDE COMPRESSOR MOUNT BOLT ASSEMBLY AT THIS TIME.
4. INSTALL VEE BELT.
5. ALIGN COMPRESSOR PULLEY WITH DRIVE PULLEY.
6. MARK SLOTS IN SHOE ASSEMBLY ONTO COMPRESSOR BRACKET.
7. REMOVE COMPRESSOR WITH SHOE ASSEMBLY AND COMPRESSOR BRACKET.
8. DRILL .375" D HOLES THROUGH BRACKET AT MOST INBOARD SLOT POSITIONS.
9. INSTALL ALL COMPONENTS.
10. **AFTER COMPRESSOR IS IN PLACE W/BELT, ALIGN P/N 530036, DRILL 2 EA #10 HOLES AND INSTALL TENSION ASSY.**

NOTE: DO NOT INSTALL WASHER UNDER HEAD OF BOLTS.

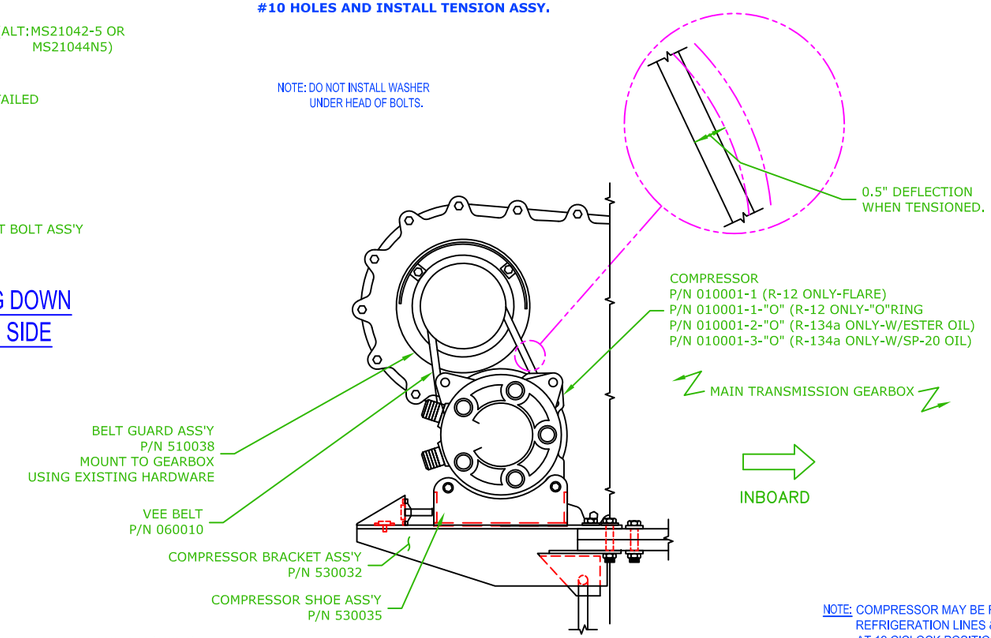

VIEW LOOKING AFT

NOTE: COMPRESSOR MAY BE ROTATED 90°, IF DESIRED. REFRIGERATION LINES & CONNECTIONS ARE THEN AT 12 O'CLOCK POSITION.

PRESSURE SWITCHES MAYBE REQUIRED
TO BE LOCATED AWAY FROM COMPRESSOR
WITH USE OF R-134a
SEE PLUMBING AND ELECTRICAL ROUTING.

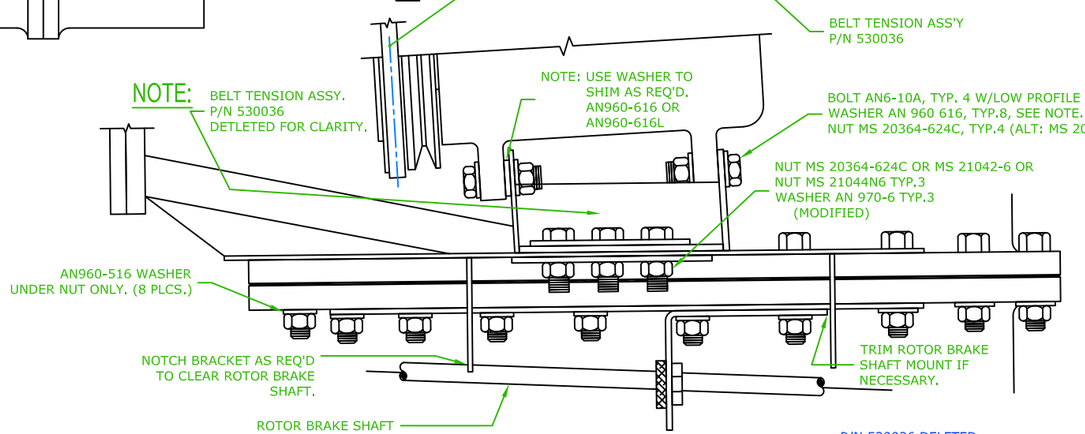

VIEW LOOKING INBOARD

P/N 530036 DELETED
FOR CLARITY

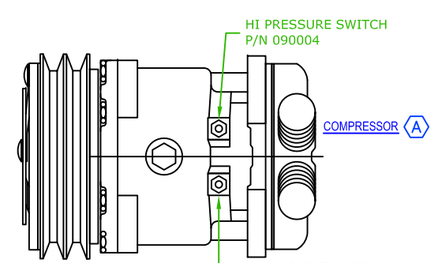

SIDE VIEW

A

C B

INTEGRATED Flight Systems

TITLE: COMPRESSOR INSTALLATION				
DRAWN BY: BRP	DATE: 05/30/85	REV C	SCALE: NONE	SHEET: 1 OF 1
APPLICATION: AS355, AS355NP			DWG No. 6-1-AS355	

INSTRUCTIONS:

1 PLACE MOUNTING CHANNEL AS HIGH AS POSSIBLE. INSPECT FOR EXISTING RIVETS THAT MIGHT HOLD CHANNEL OFF DECK.

2 TRIM/NOTCH CHANNEL AROUND RIVETS.

3 RE-FIT BEFORE MATCH DRILLING AS IN (4).

4 MATCH DRILL COND FAN MT CHAN TO EXISTING MOUNT ANGLE INSTALL RIVETS CR 3243-4-X

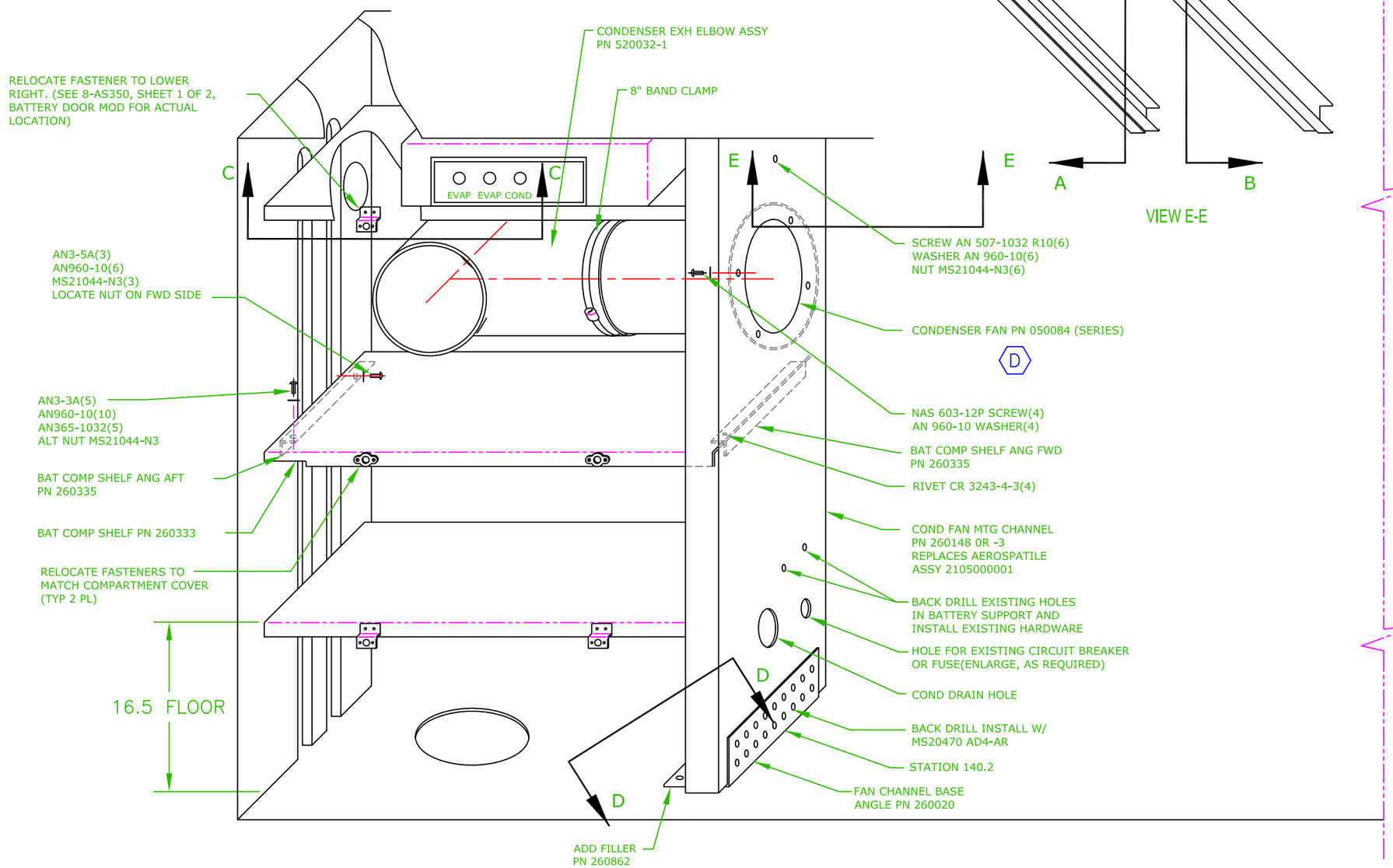

RIGHT BAGGAGE COMPARTMENT

REVISION RECORD

DWG REV LTR	DATE:	DESCRIPTION OF CHANGE	APPVD BY	REV BY
A	05/13/91	ADDED DIM 3.5, ADDED NOTE (FASTENERS). CHANGED VIEW OF ANGLES 260002. ADDED FILLER AND FASTENER. TITLE BLOCK WAS CAS, IS IFS. WAS 050084-1 IS 050084-4. ADDED ALT BLOWER PN 050084-6.	MD	
B	07/20/95	WAS 1 OF 1, IS 1 OF 2.	JHK	
C	06/28/00	ADDED ALT BLOWER PN 050084-7 REVISED DRAWING NUMBER WAS 7-AS355. SHEET NUMBER WAS 1 OF 2.	JHK	
D	08/06/08	UPDATED WITH NEW TITLEBLOCK. CHANGED PN: 050084-1/050084-7 TO O50084 SERIES. REMOVED LAW ENFORCEMENT/WIDE LETTER NOTE. ON BOTH SHEET 1 AND 2 OF 2		DWE

D

INTEGRATED Flight Systems

TITLE: CONDENSER INSTALL

DRAWN BY:	DATE:	REV	SCALE:	SHEET:
BT	04/12/02	D	NONE	1 OF 2

APPLICATION: AS 355

DWG No. 7-2-AS355

REVISION RECORD				
DWG REV LTR	DATE:	DESCRIPTION OF CHANGE	APPVD BY	REV BY
A	05/13/91	ADDED DIM 3.5, ADDED NOTE (FASTENERS). CHANGED VIEW OF ANGLES 260002. ADDED FILLER AND FASTENER. TITLE BLOCK WAS CAS, IS IFS. WAS 050084-1 IS 050084-4. ADDED ALT BLOWER PN 050084-6.	MD	
B	07/20/95	WAS 1 OF 1, IS 1 OF 2.	JHK	
C	06/28/00	ADDED ALT BLOWER PN 050084-7 REVISED DRAWING NUMBER WAS 7-AS355. SHEET NUMBER WAS 1 OF 2.	JHK	
D	08/06/08	UPDATED WITH NEW TITLEBLOCK. CHANGED PN: 050084-1/050084-7 TO O50084 SERIES. REMOVED LAW ENFORCEMENT/WIDE LETTER NOTE. ON BOTH SHEET 1 AND 2 OF 2		DWE

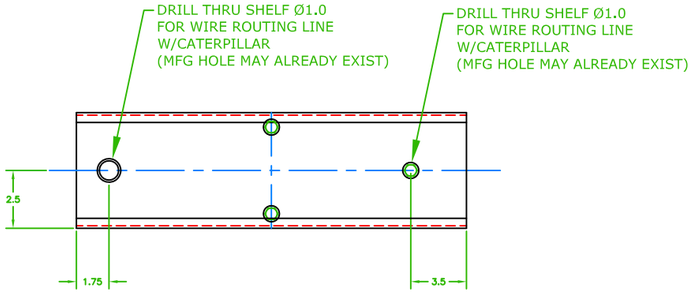

VIEW C-C

LOOKING UP

FORWARD

OUTBOARD

FORWARD

INBOARD

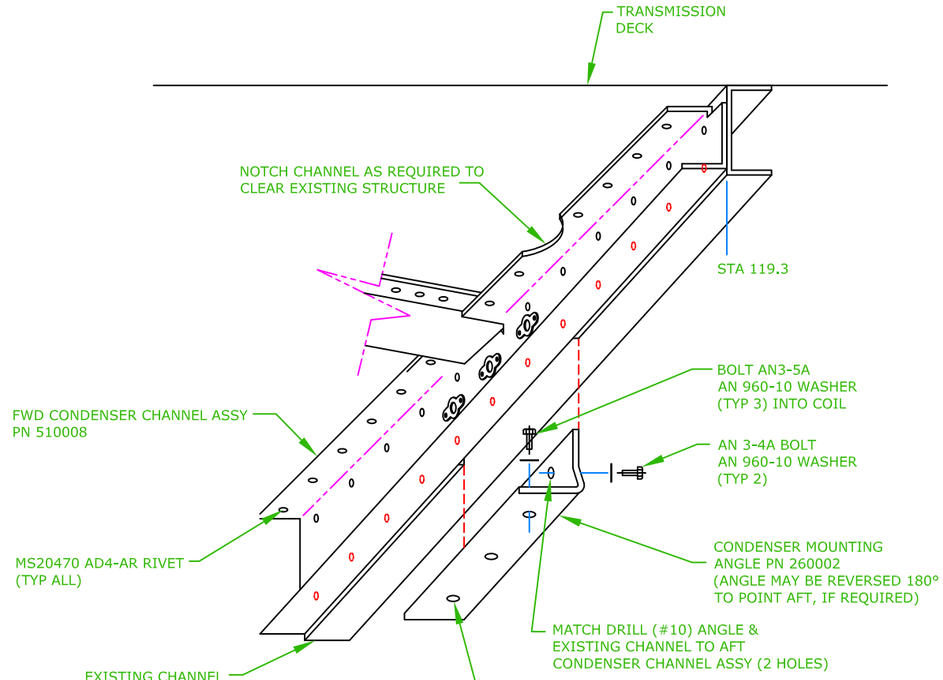

VIEW B-B

NOTE:
INTERCHANGABILITY BETWEEN MS20470AD
RIVETS AND CR3243 RIVETS ALLOWABLE.
DIAMETER AND LENGTH MAY BE
DETERMINED BY INSTALLER.

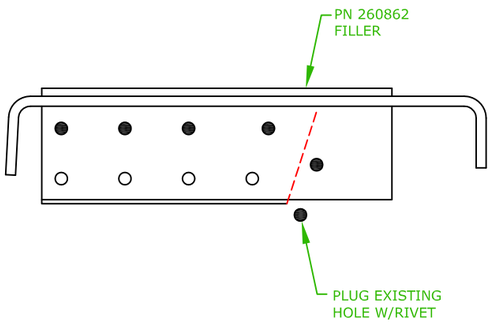

○ CR3243-4-3 RIVET DRILL THRU NEW PART
FROM ABOVE USE #27 DRILL
✕ CR3243-4-3 RIVET BACK DRILL
● #27 HOLE THRU EXISTING HOLEINTO NEW PART
CR3243-4-4 BACK DRILL #27
THRU EXISTING HOLE

VIEW D-D

LOOKING DOWN

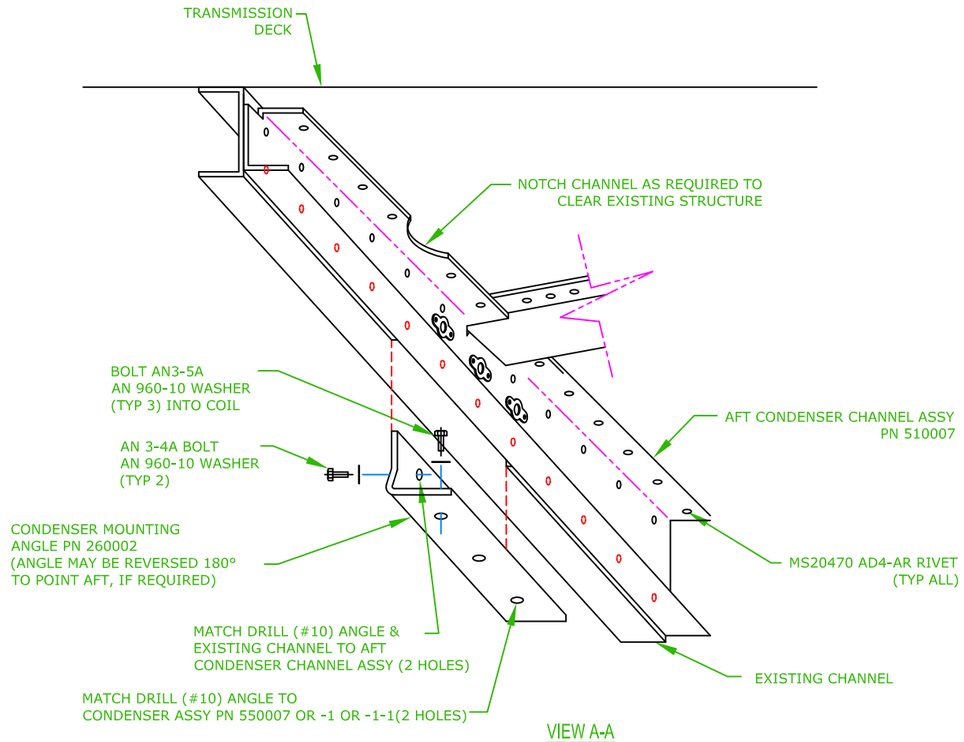

VIEW A-A

SINGLE CONDENSER BLOWER
ENVIRO SYSTEMS INC
ALT BLOWER: PN 050084-6
ALT BLOWER: PN 050084-7
AIR MOVERS, LLC

NOTE A:
USE CAUTION TO AVOID DAMAGE TO EXISTING WIRE
BUNDLE WHEN INSTALLING SHELF

INTEGRATED Flight Systems

TITLE: CONDENSER INSTALL

DRAWN BY:	DATE:	REV	SCALE:	SHEET:
BT	04/17/02	D	NONE	2 OF 2

APPLICATION:	DWG No.
AS 355	7-2-AS355

REVISION RECORD				
DWG REV LTR	DATE:	DESCRIPTION OF CHANGE	APPVD BY	REV BY
A	08/16/00	REVISED DRAWING NUMBER, WAS 7-AS 355; SHEET NUMBER WAS 2 OF 2.	JHK	K.A.
B	08/06/08	COMPUTERIZED, ADDED TO 355 DWG LIST. UPDATED WITH NEW TITLE BLOCK.		DWE

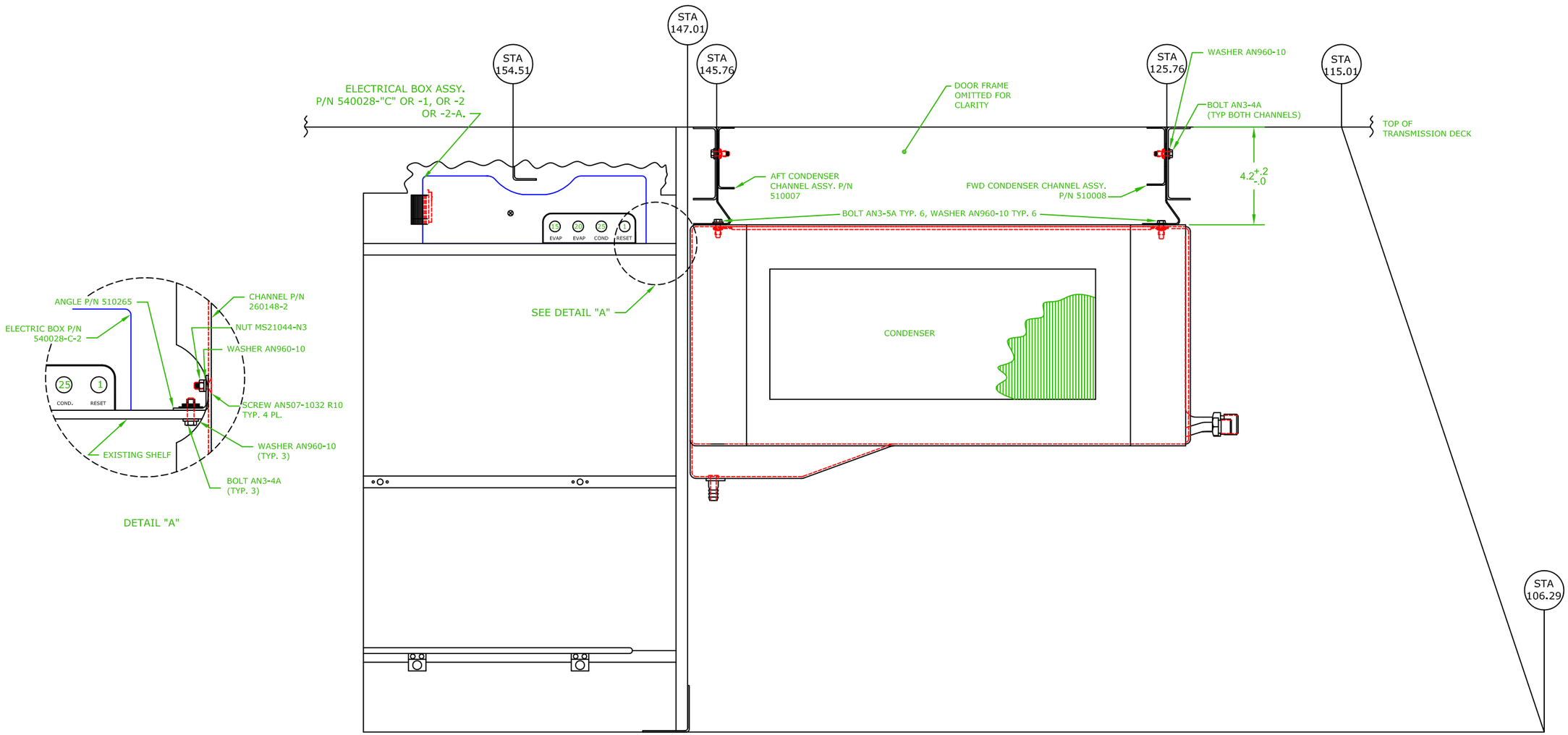

INTEGRATED Flight Systems

B

TITLE: CONDENSER INSTALL

DRAWN BY:	DATE:	REV	SCALE:	SHEET:
K.A.	05/25/95	B	NONE	1 OF 1

APPLICATION:	DWG No.
AS 355	7-11-AS355

REVISION RECORD				
DWG REV LTR	DATE:	DESCRIPTION OF CHANGE	APPVD BY	REV BY
A	08/16/00	REVISED DRAWING NUMBER, WAS 8-AS355; SHEET NUMBER WAS 1 OF 2.	JHK	K.A.
B	08/06/08	COMPUTERIZED, ADDED TO 355 DWG LIST. UPDATED WITH NEW TITLE BLOCK.		DWE

SEE ECO 0416

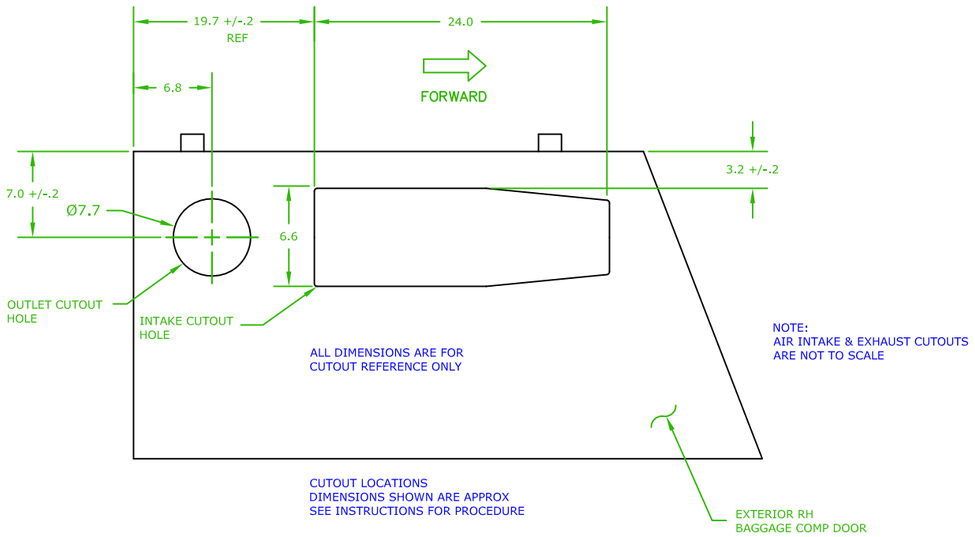

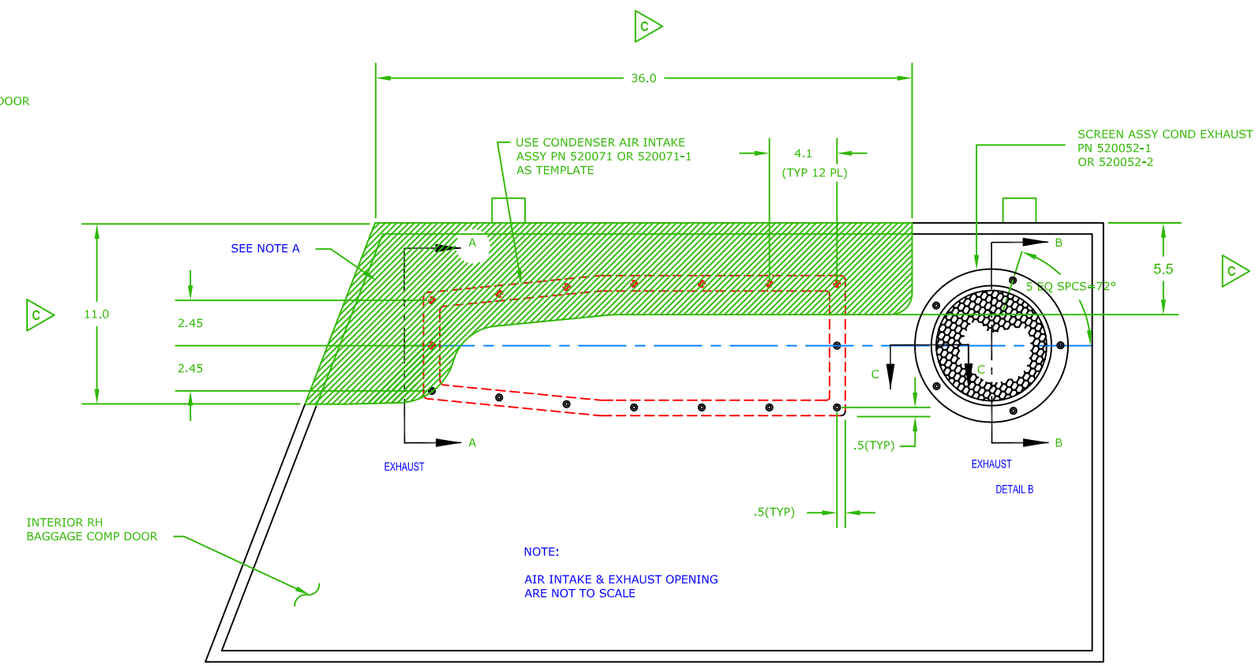

NOTE A:

1 REMOVE HINGE HARDWARE FROM INSIDE DOOR.
2 LAY UP 2 LAYERS OF 10OZ FIBERGLASS CLOTH WITH RESIN IN AREA SHOWN ON INSIDE ONLY
3 ALLOW FIBERGLASS TO CURE
4 REINSTALL HARDWARE

NOTE B:

1 TRIM CONDENSER AIR INTAKE OPENING, FORWARD, UP & DOWN AS REQUIRED TO ACCEPT AIR INTAKE ASSY PN 520071.
2 TRIM AIR INTAKE ASSY ON INSIDE TO FIT INSIDE CONDENSER AIR INLET OPENING

C NOTE C:

THESE DIMENSIONS REFERENCE FIBERGLASS REINFORCEMENT AREA.

NOTE:

IF RIGHT SIDE SLIDING DOOR IS INSTALLED IT IS PERMISSIBLE TO INSTALL EITHER 520071 OR 520071-1.

INTEGRATED Flight Systems

B

TITLE: BAGGAGE COMPARTMENT MOD.				
DRAWN BY: K.A.	DATE: 04/19/02	REV B	SCALE: NONE	SHEET: 1 OF 2
APPLICATION: AS 355			DWG No. 8-2-AS355	

REVISION RECORD				
DWG REV LTR	DATE:	DESCRIPTION OF CHANGE	APPVD BY	REV BY
A	08/16/00	REVISED DRAWING NUMBER, WAS 8-AS355; SHEET NUMBER WAS 1 OF 2.	JHK	K.A.
B	08/06/08	COMPUTERIZED, ADDED TO 355 DWG LIST. UPDATED WITH NEW TITLE BLOCK.		DWE

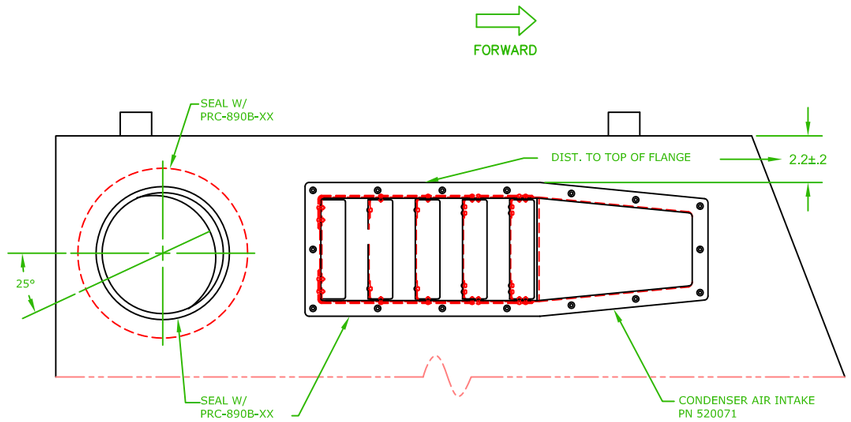

EXTERIOR RH DOOR VIEW

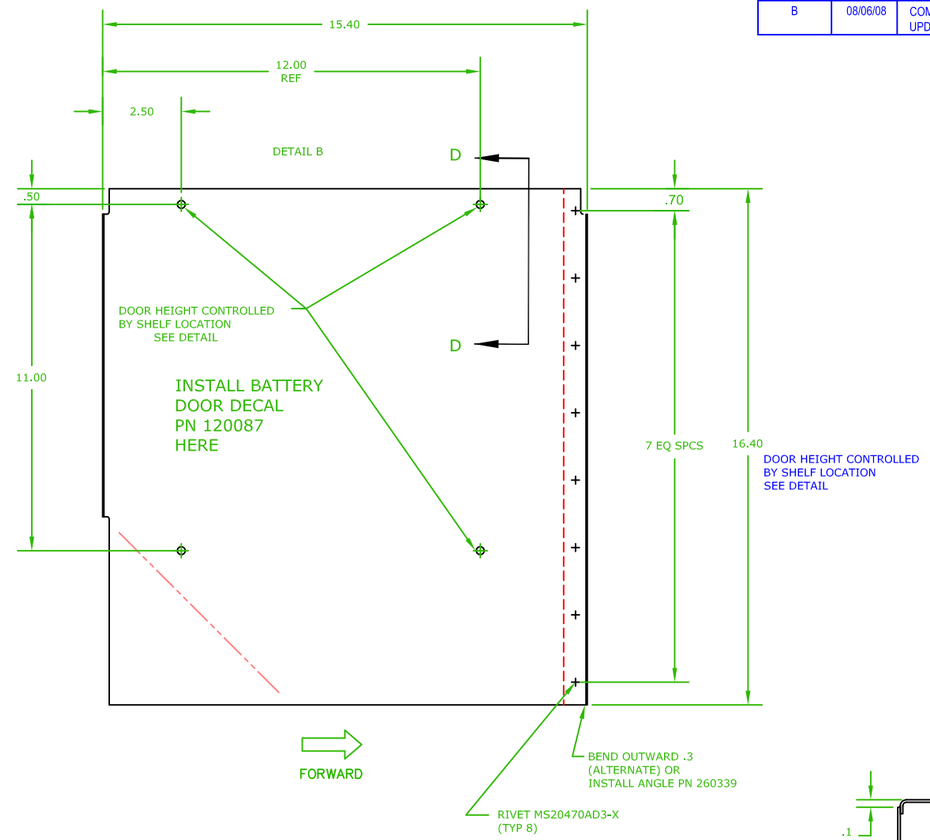

BATTERY COMPARTMENT COVER MOD

(EXISTING DOOR)

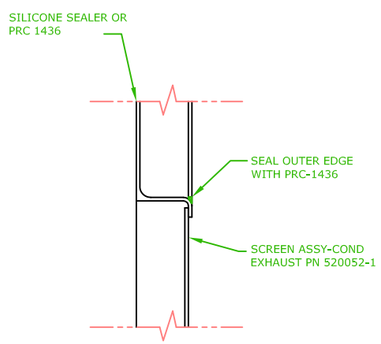

SECTION A-A

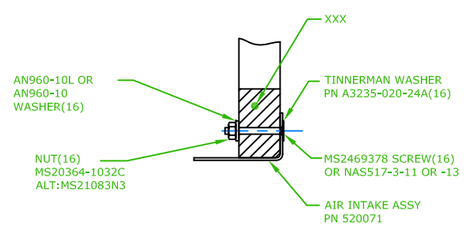

SECTION B-B

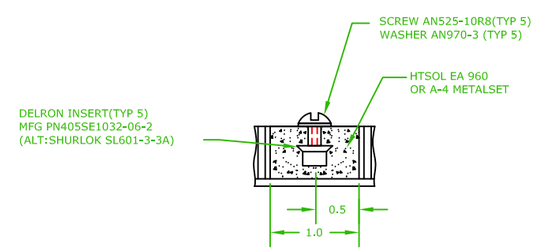

DETAIL C-C

INSERT INSTAL

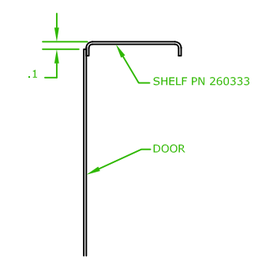

DETAIL SECTION D-D

VIEW LOOKING AFT

NOTE A:
1 REMOVE HINGE HARDWARE FROM INSIDE DOOR.
2 LAY UP 2 LAYERS OF 10OZ FIBERGLASS CLOTH WITH RESIN IN AREA SHOWN ON INSIDE ONLY
3 ALLOW FIBERGLASS TO CURE
4 REINSTALL HARDWARE

NOTE B:
1 TRIM CONDENSER AIR INTAKE OPENING, FORWARD, UP & DOWN AS REQUIRED TO ACCEPT AIR INTAKE ASSY PN 520071.
2 TRIM AIR INTAKE ASSY ON INSIDE TO FIT INSIDE CONDENSER AIR INLET OPENING

NOTE:
WHEN RIGHT SIDE SLIDING DOOR IS INSTALLED, DELETE PN 520071 & UTILIZE PN 520071-1 TO ENSURE CLEARANCE

INTEGRATED Flight Systems

B

TITLE: BAGGAGE COMPARTMENT MOD.				
DRAWN BY: BT	DATE: 04/16/02	REV B	SCALE: NONE	SHEET: 2 OF 2
APPLICATION: AS 355			DWG No. 8-2-AS355	

PSG PRODUCTS INC.

ENGINEERING CHANGE ORDER

ECO No. 0416	SHT 1 OF 1
DWG No. 8-2-AS355	REV B
DWG No.	REV
DWG No.	REV
REF. STC No. SH5947SW	

CHANGE CLASS:
- ☐ RECORD CHG. PARTS NOT AFFECTED
- ☐ NON-INTERCHANGEABLE PARTS
- ■ INTERCHANGEABLE PARTS
- ☐ OTHER _____

EXISTING/IN-WORK STOCK DISPOSITION:
- ☐ RECORD CHG. PARTS NOT AFFECTED
- ☐ RE-WORK EXISTING STOCK
- ☐ SCRAP EXISTING STOCK
- ■ OTHER BREAK IN AT NEXT BUILD

EFFECTIVITY:
- ☐ ALL UNITS THIS CUSTOMER
- ☐ LIMITED UNITS SPECIFIED
- ☐ ALL UNITS MFG'D AFTER THIS DATE
- ■ OTHER ALL UNITS

DESCRIPTION OF CHANGE

CORRECTED SECTION VIEW LINES AND NAMES TO MATCH SHEET 2 SECTION VIEWS. ADDED HOLE CALLOUT.

WAS:

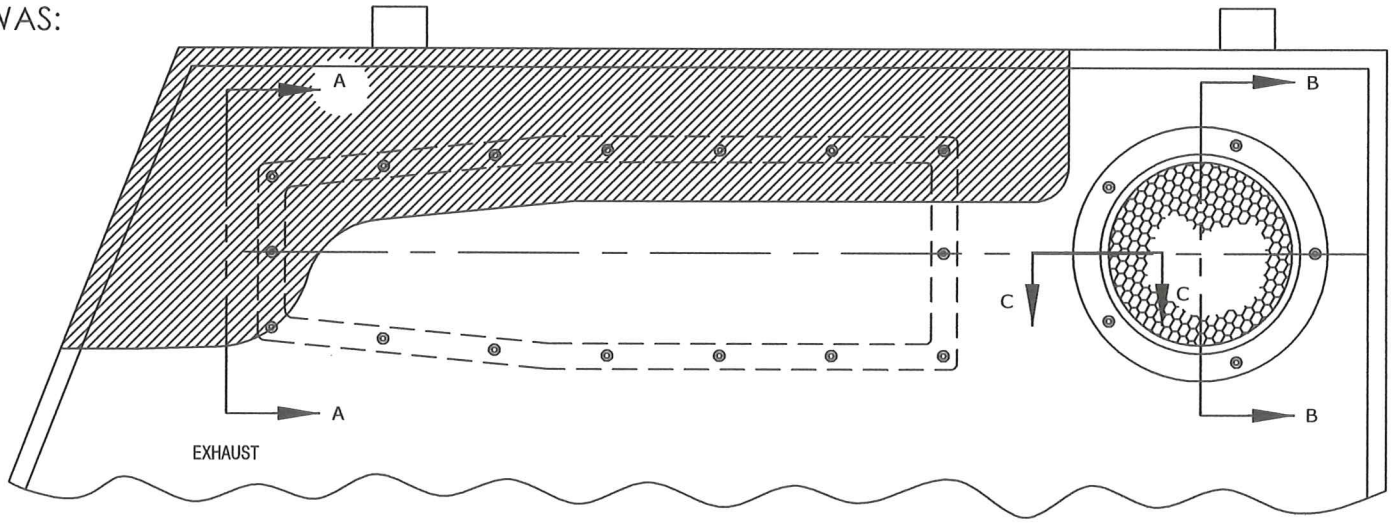

IS:

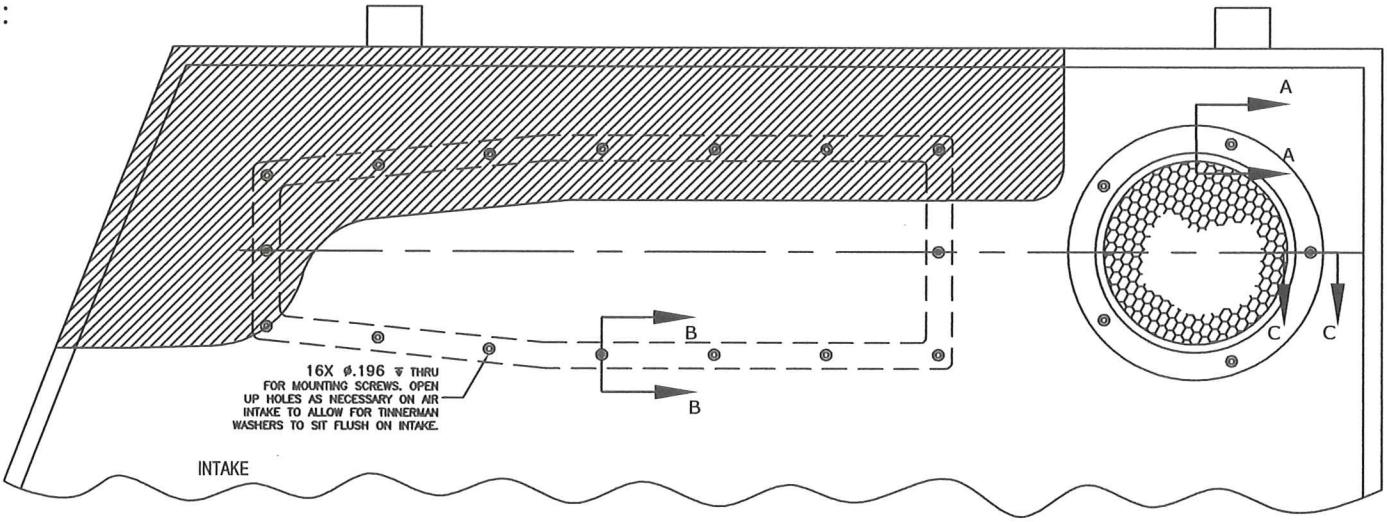

REMARKS:
MINOR CHANGES FOR PRODUCT IMPROVEMENT.

ENGINEERING REVIEW BOARD

SIGNATURE	STAMP	DATE
William L. Thornton	ERB01	06/14/2012
Guy Thyn	QA11	06/14/2012
Shane Edwards	P02	06/14/2012

INCORPORATION STATUS
- ☐ IMMEDIATE
- ■ OUTSTANDING

REVISION RECORD				
DWG REV LTR	DATE:	DESCRIPTION OF CHANGE	APPVD BY	REV BY
A	08/16/00	REVISED DRAWING NUMBER WAS 8-AS355. SHEET NUMBER WAS 2 OF 2.	JHK	BT
B	08/06/08	COMPUTERIZED. UPDATED WITH NEW TITLE BLOCK.		DWE

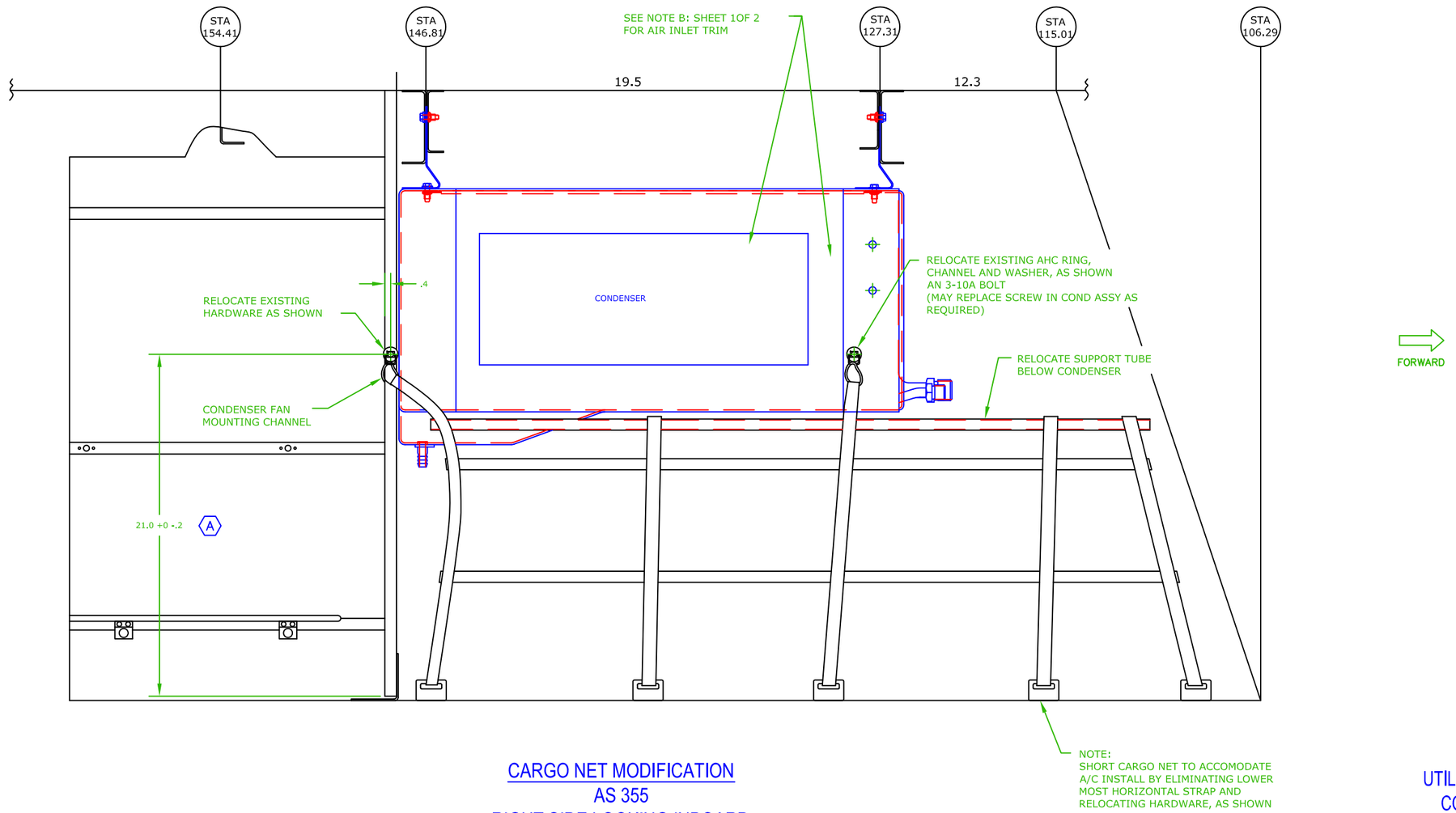

FORWARD

CARGO NET MODIFICATION
AS 355
RIGHT SIDE LOOKING INBOARD

UTILIZED WITH:
CORPORATE or EMS

INTEGRATED
Flight Systems

B

TITLE: BAGGAGE COMPARTMENT MOD.

DRAWN BY:	DATE:	REV	SCALE:	SHEET:
JWM	05/30/85	B	NONE	1 OF 1

APPLICATION:	DWG No.
AS 355	8-11-AS355

REVISION RECORD

DWG. REV. LTR.	DATE:	DESCRIPTION OF CHANGE	APPVD. BY	REV. BY
IR	08/06/08	INITIAL RELEASE.	-	-

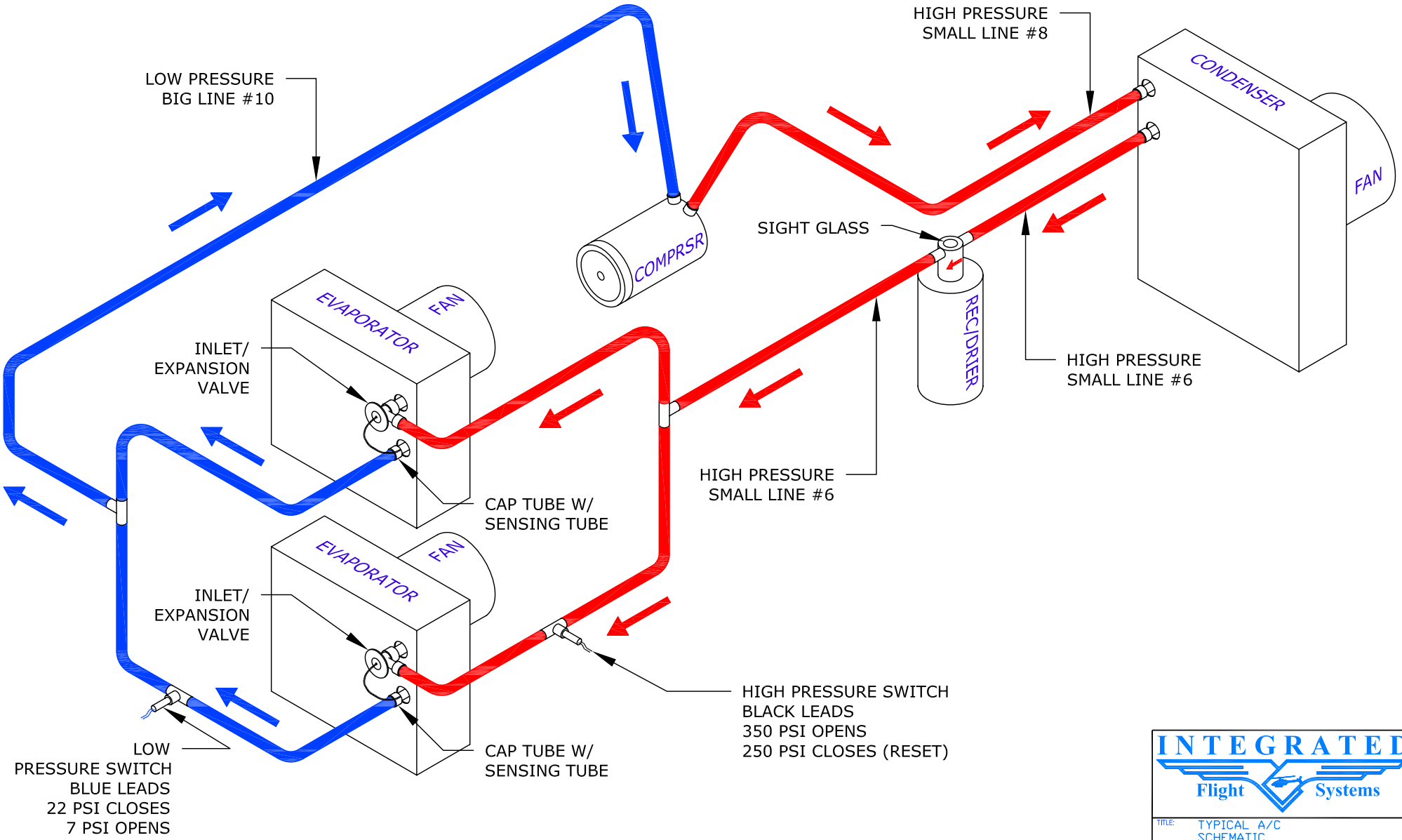

INTEGRATED Flight Systems

TITLE: TYPICAL A/C SCHEMATIC				
DRAWN BY: JTYE	DATE: 02/02/05	REV.: IR	SCALE: NTS	SHEET: 1 OF 1
APPLICATION: N/A			DWG. NO.: DIAGRAM	

REVISION RECORD				
DWG REV LTR	DATE:	DESCRIPTION OF CHANGE	APPVD BY	REV BY
IR	08/06/08	INITIAL RELEASE.	-	-

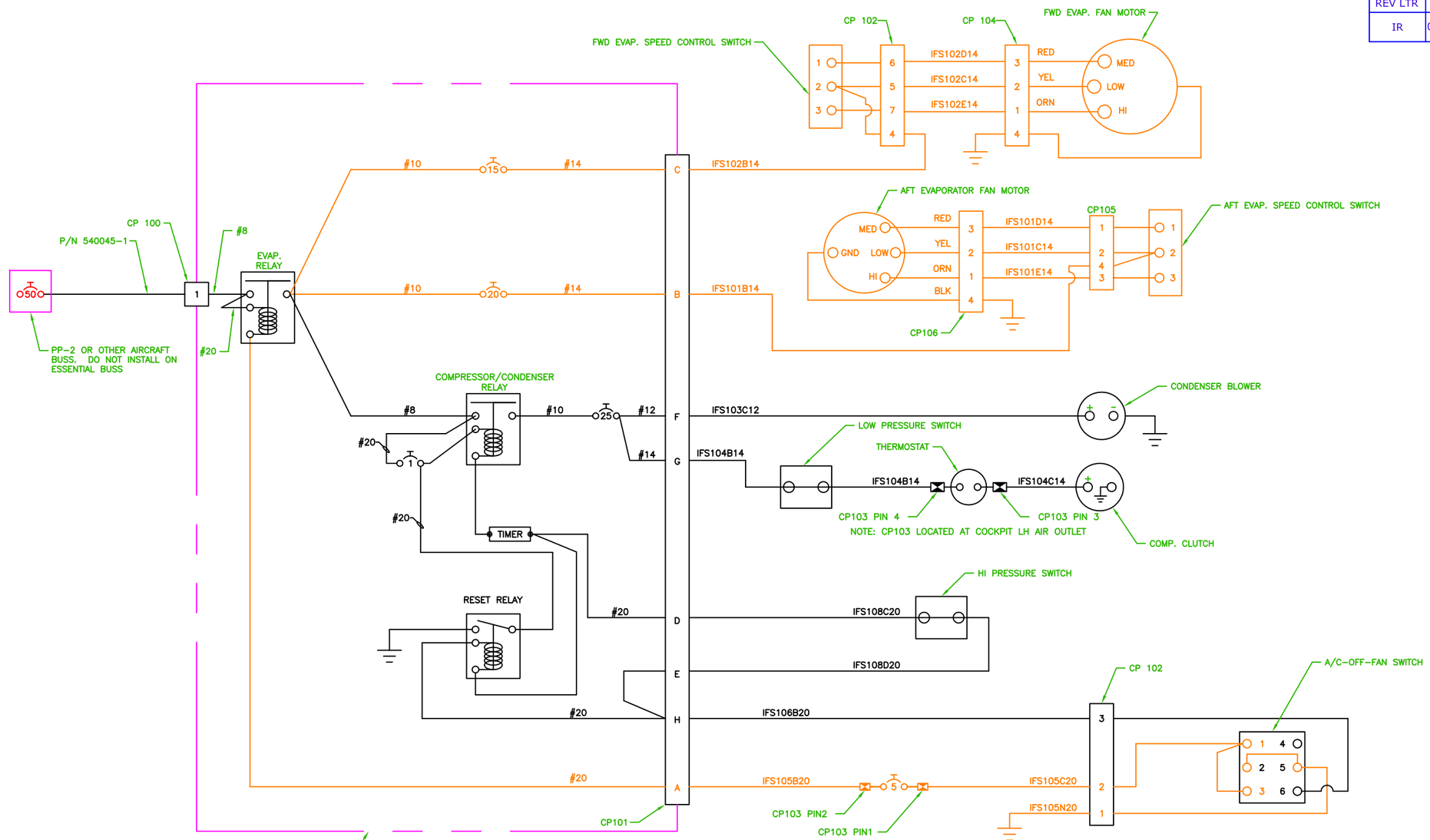

NOTE:

1. DRAWING SHOWN WITH SYSTEM SERVICED WITH FREON.
2. THE "A/C", "OFF", "FAN" SWITCH IS SELECTED TO FAN.
3. THE "ORANGE" LINES SHOW THE FAN CIRCUIT.

AS 355
ELECTRICAL WIRING DIAGRAM

SINGLE CONDENSER BLOWER

NOTE:

1. SEE DWG 2-11-AS355 FOR WIRE SPLICE LOC.
2. WIRE SPEC: MIL-W-22759/16
   WIRE NO. IFS XXX X XX

GROUP
SEQUENCE (N INDICATES GROUND)
GAUGE

SINGLE CONDENSER BLOWER

INTEGRATED Flight Systems
Reno Nevada

TITLE: ELECTRICAL DIAGRAM				
DRAWN BY: MGV	DATE: 08/24/07	REV IR	SCALE: NONE	SHEET: 1 OF 1
APPLICATION: AS355			DWG No. DIAGRAM 1	

REVISION RECORD				
DWG REV LTR	DATE:	DESCRIPTION OF CHANGE	APPVD BY	REV BY
-	--/--/--	-	-	---

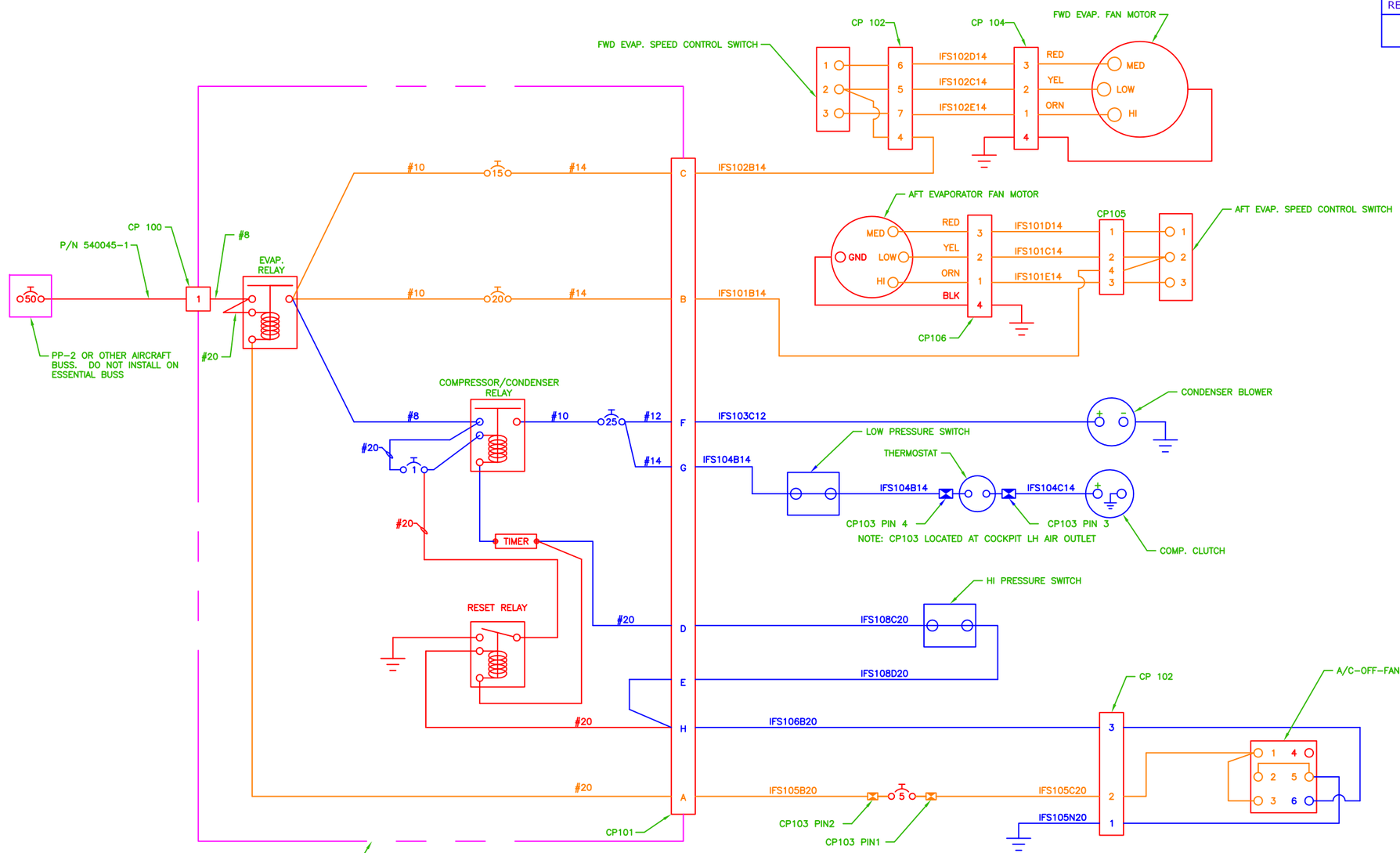

NOTE:

1. DRAWING SHOWN WITH SYSTEM SERVICED WITH FREON.
2. THE "A/C", "OFF", "FAN" SWITCH IS SET TO "A/C". THIS WILL TURN ON THE EVAPORATOR FANS, (ORANGE LINES), THE CONDENSER FANS AND COMPRESSOR CLUTCH, (BLUE LINES).

AS 355
ELECTRICAL WIRING DIAGRAM

SINGLE CONDENSER BLOWER

NOTE:

1. SEE DWG 2-11-AS355 FOR WIRE SPLICE LOC.
2. WIRE SPEC: MIL-W-22759/16
   WIRE NO. IFS XXX X XX
   - GROUP
   - SEQUENCE (N INDICATES GROUND)
   - GAUGE

SINGLE CONDENSER BLOWER

INTEGRATED Flight Systems
Reno Nevada

TITLE: ELECTRICAL DIAGRAM				
DRAWN BY: MGV	DATE: 08/24/07	REV IR	SCALE: NONE	SHEET: 1 OF 1
APPLICATION: AS355			DWG No. DIAGRAM 2	

REVISION RECORD				
DWG REV LTR	DATE:	DESCRIPTION OF CHANGE	APPVD BY	REV BY
-	--/--/--	-	-	---

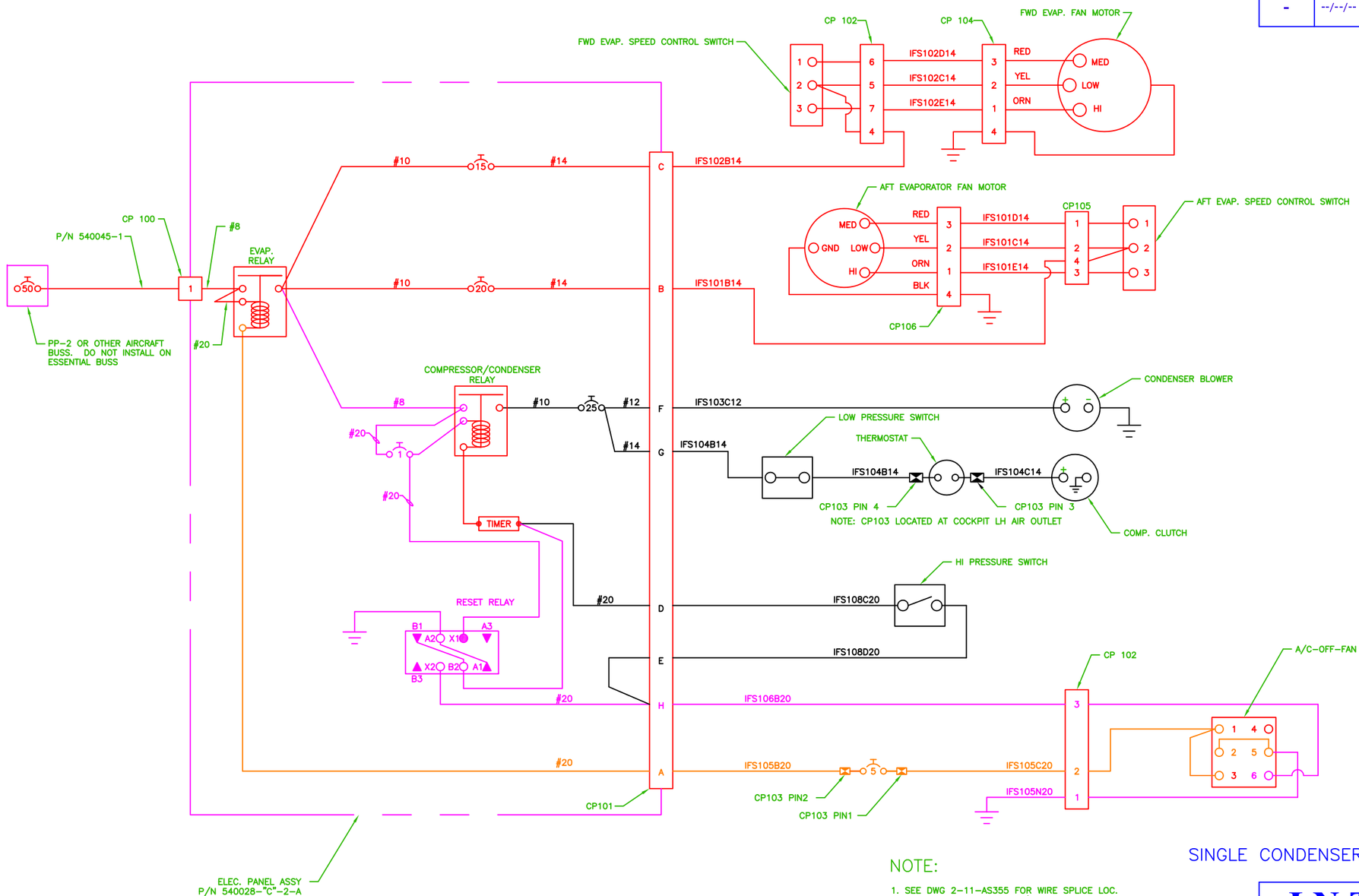

NOTE:

1. DRAWING SHOWN WITH SYSTEM SERVICED WITH FREON. HIGH PRESSURE SWITCH OPEN.
2. PINK LINES INDICATE THE CIRCUIT THAT IS ACTIVATED WHEN THE HIGH PRESSURE SWITCH OPENS.
3. THE RESET RELAY CLOSES AND RUNS THE CURRENT TO GROUND OPENING THE 1 AMP CIRCUIT BREAKER. ORANGE LINES INDICATE THAT THE EVAPORATOR FANS ARE ON.

AS 355
ELECTRICAL WIRING DIAGRAM

SINGLE CONDENSER BLOWER

NOTE:

1. SEE DWG 2-11-AS355 FOR WIRE SPLICE LOC.
2. WIRE SPEC: MIL-W-22759/16
   WIRE NO. IFS XXX X XX
   - GROUP
   - SEQUENCE (N INDICATES GROUND)
   - GAUGE

SINGLE CONDENSER BLOWER

INTEGRATED Flight Systems
Reno Nevada

TITLE: ELECTRICAL DIAGRAM				
DRAWN BY: MGV	DATE: 08/24/07	REV IR	SCALE: NONE	SHEET: 1 OF 1
APPLICATION: AS355			DWG No. DIAGRAM 3	

Warranty Terms

RSG Products Inc., warrants that each of its Air Conditioning Systems (the "Equipment") shall be free from defects in material and workmanship under normal use and service until one year after its date of sale if, and only if, installation, maintenance and operation of the Equipment is in accordance with the specifications and instructions provided by RSG Products Inc. and no substitute parts are installed in accordance with the specifications and instructions provided by RSG Products Inc. and no substitute parts are installed in the equipment without the prior written authorization from RSG Products Inc.. For the Equipment, the warranty period is 12 months or 1,000 hours, whichever comes first, from the date of sale. In the case of new spare parts, this warranty is further limited to a period of six (6) months from the date of sale. In the case of overhauled products, this warranty is further limited to a period of three (3) months from the date of sale. In the case of repaired products, this warranty is further limited to a period of thirty (30) days from the date of sale and applies only to the parts used for the repair. Any claims under this warranty shall be made to RSG Products Inc., 3900 Falcon Way West Hanger 16S, Fort Worth, Texas 76106, USA. Warranty is not valid unless the enclosed Registration Card is completed and returned to RSG Products Inc. prior to any claim. The Warranty Claim Form must be completed and returned with the Equipment. All claims shall be handled according to standard warranty repair procedures.

Limitations & Exclusions. This warranty shall not apply to any Equipment repaired or altered outside the Rotorcraft Services Inc. Service Department unless express prior written authorization is granted: nor shall this warranty apply to any Equipment that has been subjected to misuse or accident, as determined solely by Rotorcraft Services Inc. The sole responsibility and liability of RSG Products Inc. and your exclusive remedy under any claim arising out of, connected with, or resulting from this sale or the performance or breach or any condition of warranty there under, or from the manufacture, delivery, or use of the Equipment shall be the repair or replacement of defective equipment upon return of the defective equipment to RSG Products Inc. with transportation, customs and any applicable import duties prepaid and provided that an inspection by RSG Products Inc. discloses that the equipment is defective and covered by this warranty. RSG Products Inc. shall not be liable for any labor or other charges necessary to remove or reinstall the Equipment. In no event, whether as a result of a breach of contract, warranty, tort (including negligence) or otherwise, shall RSG Products Inc. be liable for any special, consequential, incidental or penal damages or expenses including but not limited to loss of profit, goodwill or revenues, loss of use of the Equipment or any associated equipment, damage to associated equipment, cost of capital, cost of substitute products, facilities or services, down time, or costs or claims of third parties for such damages or expenses.

THE FOREGOING WARRANTY IS EXCLUSIVE AND IN LIEU OF ALL OTHER WARRANTIES OR REMEDIES WHETHER WRITTEN, ORAL, IMPLIED OR STATUTORY, ANY AND ALL IMPLIED WARRANTIES OF MERCHANTABILITY, FITNESS FOR A PARTICULAR PURPOSE, COURSE OF DEALING OR USAGE OF TRADE ARE HEREBY EXPRESSLY DISCLAIMED AND EXCLUDED. Acceptance of the Equipment by you shall constitute your acknowledgement and acceptance of the terms, provisions, limitations and exclusions set forth herein. Such term, provisions, limitations and exclusions shall not be modified, deleted or supplemented. In a case where the purchaser has negotiated warranty terms by express written agreement with RSG Products Inc. as to certain equipment, the terms of that agreement shall supersede the warranty.

RSG PRODUCTS INC.

WARRANTY REGISTRATION FORM

DATE: _____

CUSTOMER NAME:_____

ADDRESS:_____

CITY:_____ STATE:_____ ZIP:_____

PHONE NUMBER: (____) _____FAX NUMBER:(____)_____

COMPONENT NAME: _____

PART NUMBER:_____SERIAL NUMBER:_____

TYPE AIRCRAFT:_____ N#:_____S/N:_____

AIR CONDITIONING INSTALLATION DATE:_____

AIR CON. INSTALLATION COMPANY:_____

DATE INSTALLED:_____ T.T AT INSTALLATION:_____

COPY OF T.T. LOG BOOK ENTRY OF A/C INSTALL SIGN OFF. ☐

This Form Must be received from the Owner of the Aircraft for the warranty to be active.
Warranty period extends from Date of Purchase for a period of one year or 1000 hours
Subject to the limitations identified in the attached Warranty Terms; effective 22 February 2007

PLEASE REVIEW THE ATTACHED WARRANTY POLICY PRIOR TO SUBMITTING THIS REGISTRATION FORM.

PRODUCTS INC.

WARRANTY CLAIM FORM

DATE: _____ __ RMA#_____

CUSTOMER NAME: _____

ADDRESS: _____

CITY: _____ STATE:_____ ZIP:_____

PHONE NUMBER:(____)_____FAX NUMBER:(____)_____

COMPONENT NAME:_____

PART NUMBER: _____SERIAL NUMBER: _____

TYPE AIRCRAFT: _____ N#:_____S/N: _____

AIR CONDITIONING INSTALLATION DATE: _____

AIR CON. INSTALLATION COMPANY: _____

DATE INSTALLED: _____ T.T AT INSTALLATION: _____

DATE REMOVED: _____ T.T AT REMOVAL: _____

REASON FOR RETURNING COMPONENT: _____

For Company use only

Date Received: _____

Warranty Accepted: ____YES ____NO

Disposition of component: _____

Comments: _____

_____

Standard Terms and Conditions of Sale

1. Terms of Payment: Unless prior arrangements are made to establish credit terms RSG Products Inc., all sales are prepaid in full prior to shipment. Payment may be made via cash, check or electronic transfer to RSG Products Inc. prior to delivery.
2. Buyer's Deposit: A 50% deposit is required to process an order for an air conditioning kit. The deposit is non-refundable and will be applied to the final price of the kit.
3. Taxes / Other Charges: Prices of the specified products are exclusive of all city, state, federal and international taxes, duties, levies or charges of any kind, including, without limitation, taxes on manufacture, sales, receipts, gross income, occupation, use and similar taxes or other charges. Whenever applicable, any taxes or other charges shall be added to the invoice as a separate charge to be paid by Buyer.
4. Shipment and Packaging: All products will be suitably packed, marked and shipped F.O.B. RSG Products Inc. Fort Worth Texas, in accordance with standard packaging procedures.
5. Delays: RSG Products Inc. will not be liable for any delay in the performance of orders or contracts, or in the delivery or shipment of goods, or for any damages suffered by Buyer by reason of such delays.
6. Technical Advice: RSG Products Inc. technical support staff is available for telephone consultation concerning the products it manufactures; however, RSG Products does not warrant or guarantee such advice.
7. Aircraft Variation: Due to aircraft manufacturing variations, alterations and other factors, there are differences between aircraft of a certain make and model. Because of these variations, RSG Products Inc. does not guarantee that Buyer has purchased the correct product or that a specified product will fit the intended aircraft. Further, RSG Products does not guarantee the number of labor hours required to install its products.
8. Returns: All sales are final unless a return is approved at the sole discretion of RSG Products Inc. If RSG Products Inc. does agree to accept a return, a twenty percent (20%) restocking fee will be charged. All items returned to RSG Products Inc. must be sent freight prepaid and must have a return material authorization (RMA) number clearly marked on the shipping container.
9. No Fault Found: If items are sent to RSG Products Inc. for evaluation and no problem is found, or if Buyer elects not to make the required repairs, then Buyer shall be responsible for the payment of $250 evaluation fee.
10. Certificate of Conformity: RSG Products Inc. will provide a Certificate of Conformity with each product assuring that the product has been manufactured according to its approved design drawings. Any additional assurances or certifications shall be at the expense of Buyer and shall be added to the invoice as a separate charge to be paid by Buyer.
11. Failed Products: Should any product prove defective, RSG Products Inc. will either replace the item or adjust the matter fairly and promptly, but under no circumstances shall RSG Products be liable for consequential or other damages, losses, or expenses in connections with or by reason of the use or liability to use products purchased for any purpose.
12. Patents: Buyer shall hold RSG Products Inc. harmless from, and release and not make claim or suit against RSG Products because of any suits, claims, losses, or other liability made against, or suffered by, Buyer arising from any claim of, or infringement of, patent, copyright, trademark, or other proprietary right, at common law, or claim of unfair trade or of unfair competition, resulting from, or occasioned by Buyer's use, possession, sale, or delivery of the products sold to Buyer by RSG Products Inc.
13. Warranty Registration and Claims: The terms RSG Products Inc. Limited Warranty is written on the Warranty Registration Card and published on the RSG Products Inc., website www.integratedflightsys.com. The registration form must be completed and returned to RSG Products Inc. upon receipt of a product. The completed form may be faxed to +1 817 624 6601. Failure to complete the Warranty Registration Card may result in denial of a claim. In order to process a warranty claim, call RSG Products Inc. at +1 817-624 6600 or fax +1 817 624 6601. A Warranty Claim without a Return Material Authorization (RMA) Number will cause delays and a possible denial of the claim.

WEBSITE

Terms of Use. When you access, browse or use this Site, you accept, without limitation or qualification, the terms and conditions set forth below. If you do not agree to them, do not use the Site or download any materials from integratedflightsys.com. The information herein contained may include technical inaccuracies or typographical errors. Changes may periodically be made to the information and will be incorporated in new editions of this document without notice. In no event will RSG Products Inc. be liable to any party for any direct, indirect, special or other consequential damages for any use of this web site or any other hyper linked site; including without limitation any lost profits, business interruption, loss of programs or other data on your information handling system.

Site Information. Site information regarding RSG Products Inc., services, technical parts and components, including their availability, appearance, price and specifications are subject to change without notice. In no event shall RSG Products be held liable for indirect or consequential damages or any damages resulting from the use of information from this Site. The information on this Site is at the recipient's own risk.

Links. This site contains links to other Sites on the World Wide Web. RSG Products Inc. provides such links for your convenience only, and is not responsible for the content of any Site linked to or from this Site. Links from this Site to any other Site does not mean that RSG Products Inc. approves of, endorses or recommends that Site.

Rights of Use. Any person is hereby authorized to view, copy, print, and distribute any document published by Integrated Flight Systems Corp provided that it is: for personal use, for information purposes and reference must be made to RSG Products Inc. when the document is used.

Information Collected. When you visit this site, RSG Products Inc. may collect information in two ways – through information automatically gathered from your computer or through information you voluntarily provide. As to automatically gathered information, RSG Products collects navigational information about where visitors go on our Site, how many visits are made to the Site, when the Site is visited and other non-personally identifiable information (for example, this can include domain type, browser version, service provider, IP address). The navigational information that is automatically gathered when you visit integratedflightsys.com is used on an aggregate basis to evaluate and effectiveness of our Site, to analyze trends and to administer the Site. This navigational information allows us to determine such things as which areas are most visited and difficulties our visitors may experience in accessing out Site. Voluntarily provided information is collected online if you elect to e-mail RSG Products Inc. Whenever this act is made the information you voluntarily provide, name, e-mail address, phone number, specific information comments or questions, is not distributed and is confidential. All information collected from our site and/or information voluntarily provided is kept confidential and is not distributed for any reason without your approval.

14. Acceptance: This is not a firm offer and may be changed or revoked at any time. Acceptance of this offer is expressly limited to the exact terms contained herein, or as may be changed by a prior written contract between the Buyer and RSG Products Inc., and any attempt to alter or omit any of such terms shall be deemed a rejection and a counteroffer.