EC130 Series Air Conditioning

Features & Specifications

- FAA PMA STC: SH3509SW (AS-350 B, B1, B2, B3 BA, C D, D1; EC130B4)
- Single 7” Condenser Blower Motor Located in Tail Boom
- Dual Air Distribution with Multiple Speed Fans and Controls
- Compressor Provides 28,500 BTU with Dual Evaporators
- Qualified High Reliability, Low Noise, Brushless Motor Assemblies
- Lightweight, Only 80 Lbs. (36.3 Kg.)
- Uses Environmentally Friendly R-134a Refrigerant
- Electronic Fresh Air Control Vent System

Configuration Options

Request a Quote

EC130 Series Air Conditioning

Configuration Options

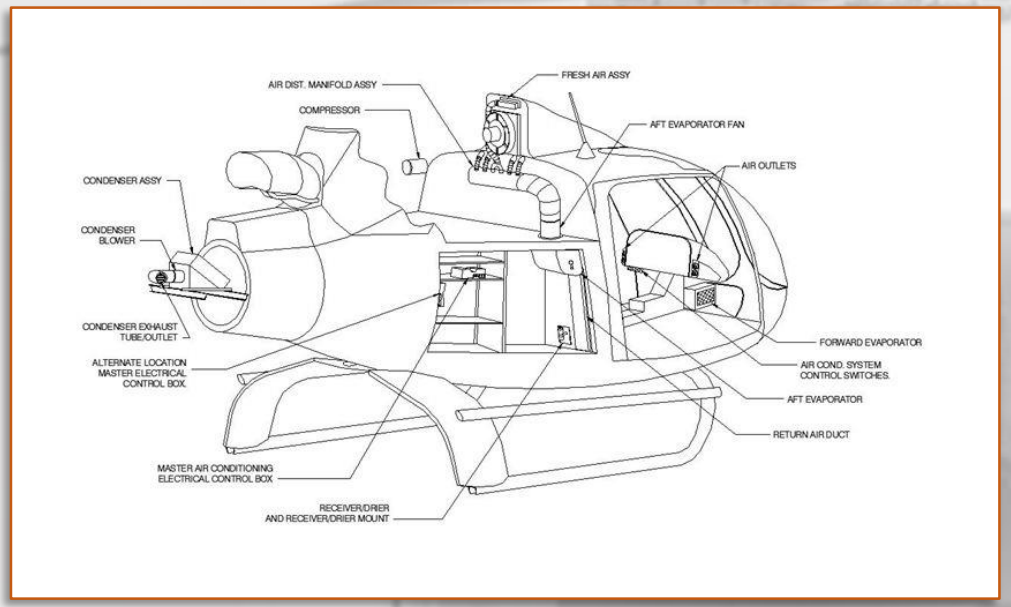

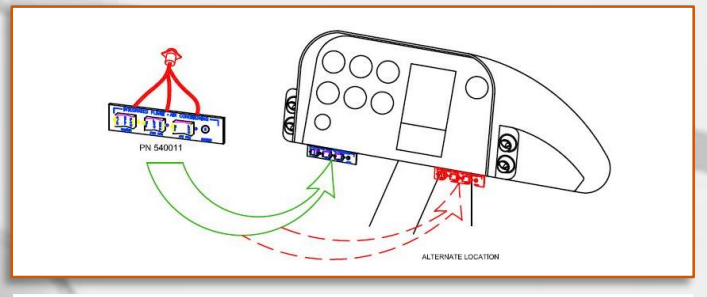

(-011) SWITCH OPTION

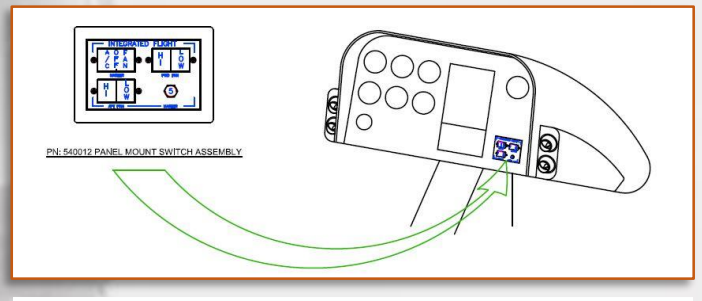

(-012) SWITCH OPTION

Part Number
130-00-031-HP CORPORATE VERSION (*indicate switch option)
130-00-031-HP EMS VERSION
130-00-031-HP TOUR VERSION

*The design may be adapted to other configuration options upon request

Request a Quote